INDIAN PRECISION ENGINEERS

Quality Beyond Customer Satisfaction

I P E

ELECTROMAGNETIC CLUTCHES AND BRAKES

Features.

- *For Positive drive torque transmission.*
- *Low residual torque, High operating performance.*
- *Special Finger Springs for faster disengagement.*
- *For oil or dry running, adjustable & self-adjusting types available.*

PRODUCT CATALOGUE

01 ELECTROMAGNETIC MULTIDISC CLUTCHES & BRAKES

02 ELECTROMAGNETIC MULTIDISC ELECTROMAGNETIC FAIL-SAFE BRAKES

03 ELECTROMAGNETIC TOOTHED CLUTCHES & BRAKES

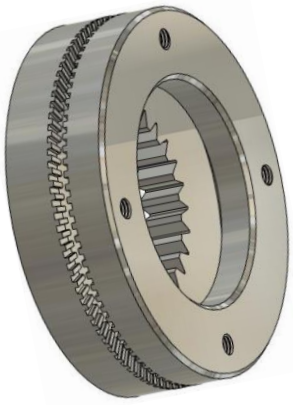

www.narsipurgroup.com

Select By Product Characteristics

PRODUCT	CATOGORY	VERSION	TYPES	FEATURES
Electromagnetic Multidisc Wet (Oil) Running	CLUTCHES	Stationary Coil Type	24.501.__.__	Power transmission In Gear Box / Oil Bath Application
		Slip Ring Type	24.502.__.__.1 24.502.__.__.3 24.502.__.__.4	Gear Box / Oil Bath Application Compact in Total Length compared to Stationary Coil Type. Power Supply through Telescopic Brush
	BRAKES	Normally OFF Type	24.512.__.__.3	Gear Box / Oil Bath Application
		Fail Safe (Spring Applied) Type	24.513.__.__	Safety Purpose when Power OFF. Normally in Braking & Power to Free. Gear Box / Oil Bath Application
Electromagnetic Multidisc Dry Running (without Oil)	CLUTCHES	Stationary Coil Type	ELSA.__.__	Transmission between Shaft to Gear / Pulley or between 02 split shaft. Suitable without Oil.
		Slip Ring Type	ELKA.__.__	Transmission between Shaft to Gear / Pulley or between 02 split shaft. Suitable without Oil. Compact in Total Length compared to Stationary Coil Type. Power Supply Through Telescopic Brush.
	BRAKES	Normally OFF Type	ELKA.__.__.B	Braking Application of Motor Shaft, Lead screw. Suitable to run without Oil.
		Fail Safe (Spring Applied) Type	24.513.__.__.D	Safety Purpose when Power OFF. Normally in Braking & Power to Free
Electromagnetic Toothed (With or Without OIL)	CLUTCHES	Stationary Coil Type	24.504.__.__ 24.514.__.__	All Kind of Power Transmission. Engagement only at Zero RPM. 10 times more torque compared to multidisc clutches in same size.
		Slip Ring Type	24.503.__.__.1 24.503.__.__.2	All Kind of Power Transmission. Engagement only at Zero RPM. 10 times more torque compared to multidisc clutches in same size. Compact in length compared to stationary Type. Supply through Telescopic brush.
	BRAKES	Normally OFF Type	24.503.__.__.3	Holding Purpose.

INDIAN PRECISION ENGINEERS

CONTENTS

Contents		3-5
Foreword		6
General Information		7-8
Electromagnetic Stationary Field Multidisc Wet Run Clutch *Type 24.501.__ __.* *Torque Range(Dyn): 10 to 960 Nm*	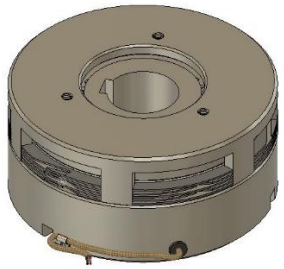	9-10
Electromagnetic Slip Ring Multidisc Wet Run Clutch. *Type 24.502.__ __1* *Torque Range(Dyn): 10 to 960 Nm*	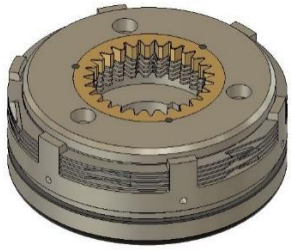	11-12
Electromagnetic Slip Ring Multidisc Wet Run Clutch with Back Slot *Type 24.502.__ __ .3* *Torque Range(Dyn): 10 to 960 Nm*		13-14
Electromagnetic Slip Ring Multidisc Wet Run Clutch with Gear Bush *Type 24.502.__ __. 4* *Torque Range(Dyn): 10 to 960 Nm*	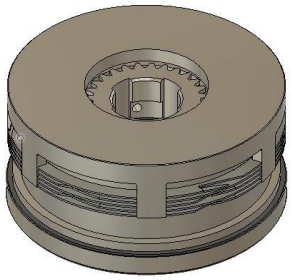	15-16
Electromagnetic Multidisc Wet Run Brake *Type, 24.512.__ __ .3* *Torque Range(Dyn): 10 to 960 Nm*	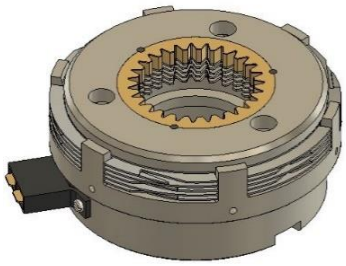	17-18
Toothed Profile for driving Bush		19

INDIAN PRECISION ENGINEERS

Electromagnetic Slip Ring Multidisc Dry Run Clutch. *Type, ELKa.__ __* *Torque Range(Dyn): 25 to 1600 Nm(Oil)* *: 32 to 2100 Nm (Dry)*		***20-21***
Electromagnetic Stationary Field Multidisc Dry Run Clutch, *Type, ELSa.__ __* *Torque Range(Dyn): 25 to 1600 Nm(Oil)* *: 32 to 2100 Nm (Dry)*	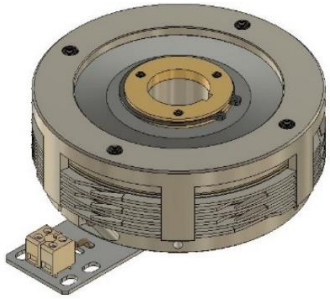	***22-23***
Electromagnetic Multidisc Dry Run BRAKE *Type, ELKa.__ __.B* *Torque Range(Dyn): 25 to 1600 Nm(Oil)* *: 32 to 2100 Nm (Dry)*	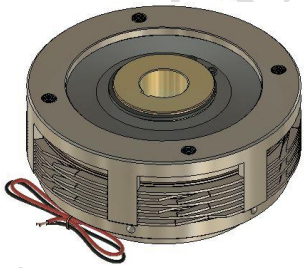	***24-25***
Electromagnetic Fail-Safe (Spring Loaded) Brake *Type 24.513.__ __* *Torque Range(Dyn): 7.5 to 350 Nm*		***26-27***
Electromagnetic Slip Ring Toothed Clutch *Type 24.503.__ __.1* *Torque Range(Mu): 100 to 6000 Nm*		***28-29***

INDIAN PRECISION ENGINEERS

Electromagnetic Slip Ring Toothed Clutch with Back Slot *Type 24.503.____.2* *Torque Range(Mu): 100 to 6000 Nm*		**30-31**
Electromagnetic Toothed Brake. *Type 24.503.____.3* *Torque Range(Mu): 100 to 4000 Nm*	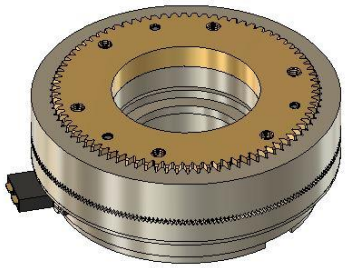	**32-33**
Electromagnetic Stationary field Toothed Clutch *Type 24.504.__ __* *Torque Range(Mu): 100 to 6000 Nm*	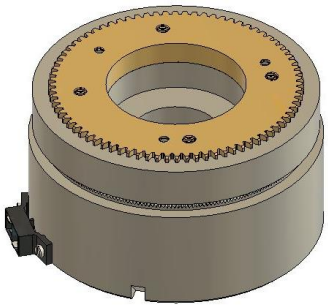	**34-35**
Electromagnetic Stationary Field Toothed Clutch without Bearing *Type 24.514.__ __* *Torque Range(Mu): 50 to 2200 Nm*		**36-38**
Installation Of Multidisc Clutches and Brakes....		**39**
Installation Of Toothed Clutches and Brakes		**40**
Operating Instruction		**41-43**
Questionnaire		**44-45**

INDIAN PRECISION ENGINEERS

"***Indian Precision Engineers"*** *ventured into the realm of Power Transmission in 1978, marking the inception of our journey. We specialize in crafting Electromagnetic Products to ensure reliable and seamless control.*

As a prominent manufacturer, with extensive experience spanning over four decades, we excel in creating a diverse array of Electromagnetic Clutches, Electromagnetic Brakes, & Electromagnetic Push Pull Linear Solenoids offered in various models.

Our steadfast dedication to Quality, Reliability, and Precision has solidified Indian Precision Engineers' position as a distinguished entity within the industry. Our products find extensive utilization across sectors such as original Equipment Machine Tools Manufacturing, S.P.M builders, the EV Sector, activated door locks, robotics, automotive engine management, irrigation valves for garden watering, Printing & Packaging industries, and Textile Industries.

We respectfully request the inclusion of our esteemed organization in your Approved Supplier's list. Our Sales & Technical teams eagerly anticipate engaging in meaningful discussions to address any challenges you encounter within this domain. Thank you for considering our services, and we assure you of our unwavering commitment to delivering excellence."

INDIAN PRECISION ENGINEERS

GENERAL INFORMATIONS

Electromagnetic Multidisc Clutches:

The Electromagnetic Clutches are of tooth and Multiple –Disc type. The multiple-disc type clutches known for their smooth acceleration and high operating performance are divided into magnetic clutches whose discs are surrounded by the field of force and those whose discs are not surrounded by the field of force. Hardened plates with finger springs are provided in both the type of clutches to minimize the residual torque and help in faster disengagement. The former types require no maintenance and are particularly suitable for wet application with high energy exchange. The latter types using Special friction material find use in dry applications where accurate shifting and transfer of a large torque at a low frequency is required.

Electromagnetic Toothed Clutches:

The Tooth Clutches recommended for their small dimensions, high torques, short operation time, accurate switching and high permissible environment. These maintenance free clutches are to be engaged while at rest or low speed and have no idling torque. Speeds are run in both wet and dry.

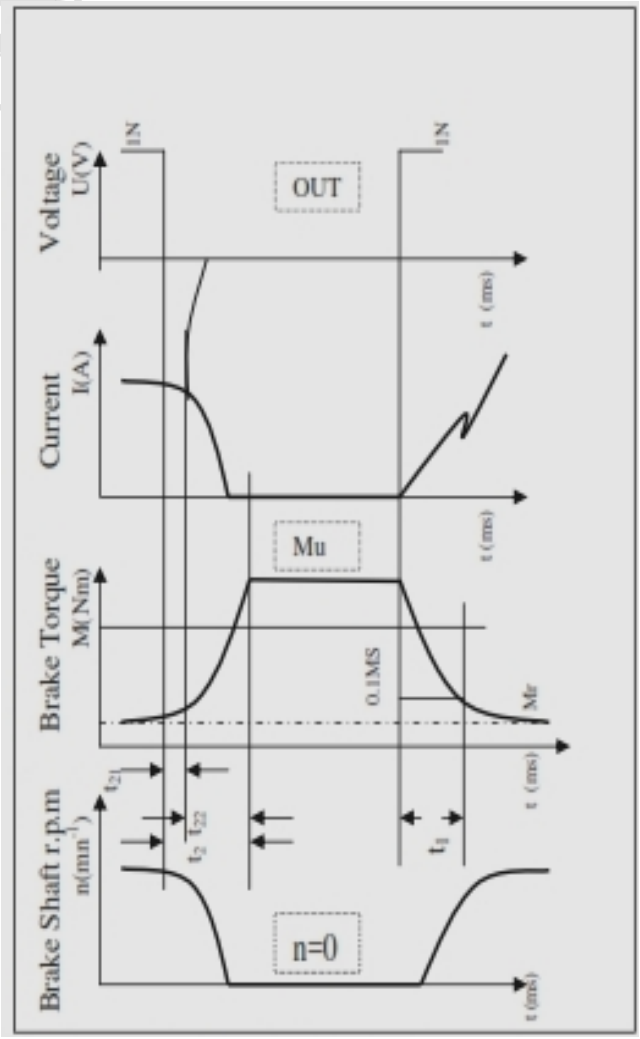

Electromagnetic Brake:

The braking of high flywheel inertia is possible by the brakes with large heat capacity and high heat dissipation.

The Electromagnetic Fail-Safe Brakes are designed to interrupt the torque transmission in the event of power failure. The braking torque is applied by spring force when the power supply to the coil is interrupted.

INDIAN PRECISION ENGINEERS

The Electromagnetic Clutch works on the principle of Electromagnetic induction i.e. the engagement and Disengagement is subjected to the laws of induction. The illustrated graph shows the time response of voltage Current, torque and speed from the instant of coil Energization.

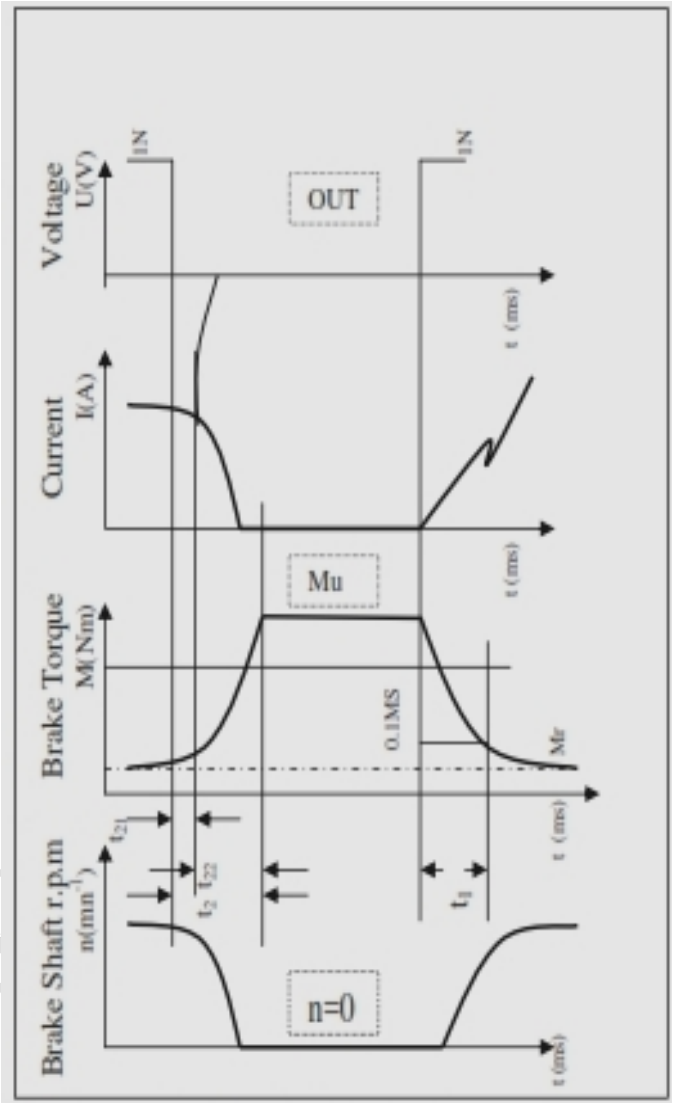

HERE:

Ms = dynamic Torque (Nm)
Mu = Static Torque (Nm)
Mr = Drag Torque (Nm)
M_{req} = Torque Required (Nm)
i = Induction Current (milli sec)
t1 = Engagement time (milli sec)
t2 = Disengagement time (milli sec)
t11 = Response delay (milli sec)
t12 = Rise time (milli sec)
P = Driving Power (kw)
n = Speed of rotation (min-1)
k = Safty factor (1, 2 to 4)

The Clutch size is determined by using the relation.

M_{req} = 9550 P/ nk (Nm)
M_{req} must be less than or equal to Ms

INDIAN PRECISIO

TABLE SHOWING ENGAGEMENT AND DISENGAGEMENT TIME									
TYPE		**SHIFT SPEED-NORMAL (milli sec)**							
	Size								
	Time	**11**	**12**	**15**	**21**	**22**	**24**	**26**	**28**
501 502 512	t1	200	220	250	360	450	600	750	900
	t2	60	70	90	110	200	250	325	400
503	t1	20	25	30	35	55	70	95	125
	t2	30	40	50	70	90	150	190	240
504 514	t1	25	30	35	50	65	100	125	145
	t2	28	35	40	60	80	130	160	200
		2.5	**4**	**6**	**10**	**20**	**40**	**60**	**80**
ELKa	t1	100	100	120	140	200	310	400	480
	t2	25	28	30	30	35	40	40	50
ELSa	t1	100	110	130	150	220	340	420	500
	t2	20	20	25	30	30	40	40	40

Part Name	Electromagnetic Stationary Multidisc Wet Run Clutch	Type	24.501.__ __- 24 VDC (size)

Dimensions:

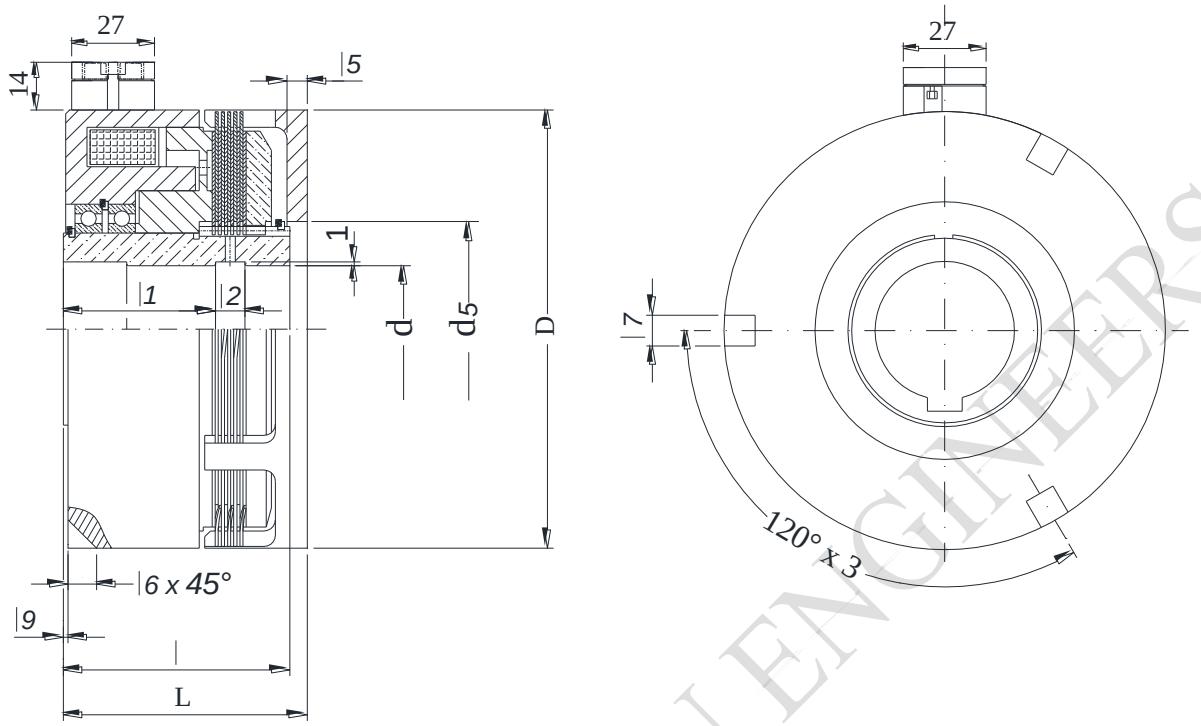

Size				11	12	15	21	22	24	26	28
Torque	dyn	Ms	(Nm)	10	25	60	120	250	480	600	960
	stat	Mu		20	40	100	200	400	800	1100	1600
Max. Speed			(min^{-1})	3500	3000	3000	2400	2000	2000	2500	2000
DC Voltage			(V)	***24 VDC***							
Power Consumption			(W)	25	24	41	50	70	86	110	104
Number of plates	Inner Plates			4	5	6	6	6	7	6	7
	Outer Plates			3	4	5	5	5	6	5	6
Weights			(kg)	1.8	2.1	3.5	5.4	9.5	14.5	22	27
Moment of inertia	Magnet Side		($10^{-3}kgm^2$)	0.6	0.75	1.73	4.5	12.5	19.5	40	73.5
	Armature Side			0.3	0.5	1.6	3	7	14.5	34	50
Bores Keyway to BS 4235	min	Ød ^{H7}	(mm)	14	15	20	25	30	35	50	50
	max			18	25	32	40	45	60	70	75
Dimensions (mm)	Ø D		(mm)	82	95	114	134	166	195	210	240
	Ø d_5 ^{H7}		(mm)	30	45	51	61	75	90	75	112
	L		(mm)	51	56	63	73	82.5	93.5	100	108.5
	$l_{-0.1}$		(mm)	46.5	52	58.5	68	76	83.5	91	98
	l_1		(mm)	---	38	38.5	46	50	52	61.5	61
	l_2		(mm)	3	10	12	14	18	18	18	22
	l_3		(mm)	10	4.5	4.5	6.5	8	9.5	12	12.5
	l_5		(mm)	5	5	6	6	8	9	10	10
	l_6		(mm)	6	6	8	10	12	15	15	15
	$l_{7+0.2}$		(mm)	6	6	8	8	8	12	12	12
	l_9		(mm)	0.5	0.5	0.5	0.5	1	1	1	1

** Special Voltage Clutches available on request. * Keyways BS 4235, DIN 6885 * Technical Alteration reserved.*

INDIAN PRECISION ENGINEERS

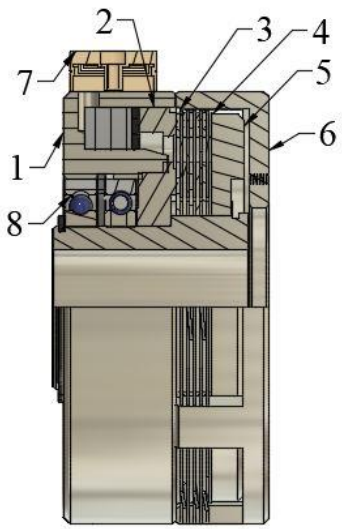

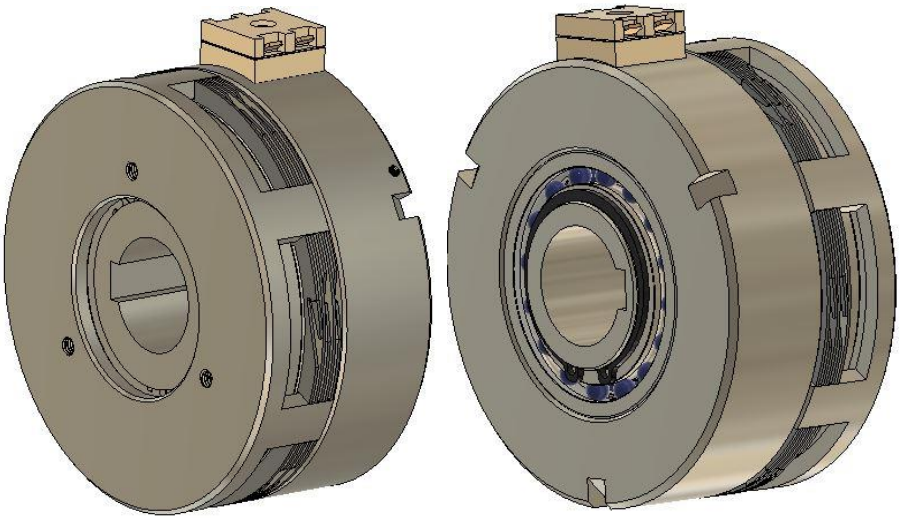

OPERATION

The Stationary Coil Housing (1) is centered over the rotor (2) by means of bearing (8). The Gear bush is pressed into the rotor, which supports the inner plate (4) and armature plate (5). Gear bush is bored has a keyway and is pressed directly on to the driving shaft together with the Rotor. Carrier (6) supports the outer plate and is bolted to the item of machinery with which it must rotate. Energization of stationary coil Housing (1) containing a potted coil through the connector (7) generates a magnetic field which attracts the sliding armature plate (5). The Clutch Plates (3&4) Compressed and driving torque is transmitted. There is no air gap between the sliding armature and clutch plates in engaged position. A permanent air gap exists, obtained by special machining between the Coil Housing (1) and Rotor (2). To release the clutch all that is necessary is to switch off the power supply.

APPLICATION

- Engagement or disengagement while running or while at rest. Operation in lubrication environment only. Friction of Steel-to-Steel Plates

EXAMPLE OF INSTALLATION

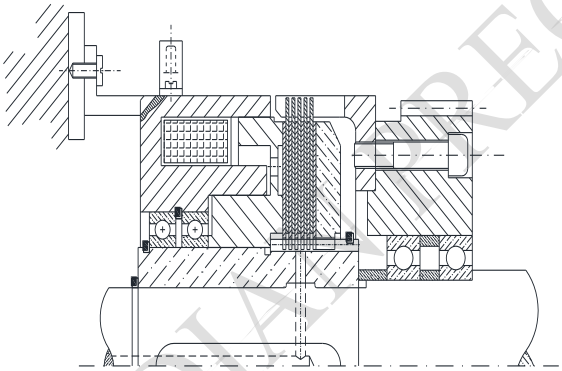

The Basic Version of Clutch fitted with gear wheel for torque transmission between shaft and gear wheel.

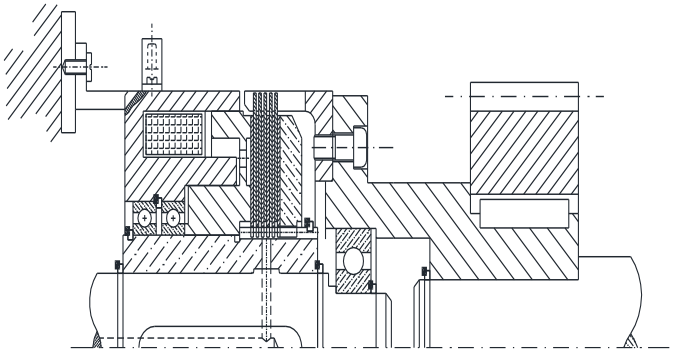

Fitted with Driven Shaft

NOTE: The Carrier must be provided with a means of axial retention so as not to affect the armature airgap.
Protect The Coil Housing against side loads to avoid straining the bearings. Carrier (6) is supplied with pilot bore. Required Mounting hole and finish bore can be made by the user.

ORDER EXAMPLE.

Electromagnetic Stationary Multidisc Wet Run Clutch
TYPE: 24.501.21 – 24 VDC
Bore d = 30mm / Keyway to DIN 6885

Contact Us:
☏ 080 43712388
✉ *ipe@narsipurgroup.com*
✉ *sales.ipeblr@gmail.com*

INDIAN PRECISION ENGINEERS

Part Name	Electromagnetic Multidisc Slip Ring Wet Run Clutch	Type	24.502.__ __.1- 24 VDC (size)

Dimensions:

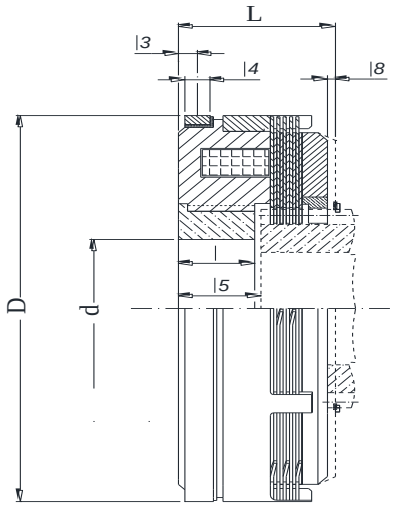

With Bush

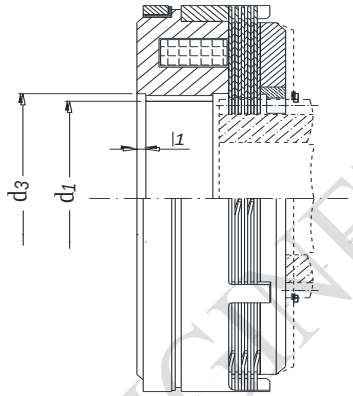

Without Bush

Size				11	12	15	21	22	24	26	28
Torque	dyn	Ms	(Nm)	10	25	60	120	250	480	600	960
	stat	Mu		20	40	100	200	400	800	1100	1600
Max. Speed			(min^{-1})	3000	3000	3000	2400	2000	2000	2000	2000
DC Voltage			(V)	***24 V DC***							
Power Consumption			(W)	17	18	30	30	45	66	91	88
Number of plates	Inner Plates			3	4	5	5	5	6	6	6
	Outer Plates			3	4	5	5	5	6	6	6
Weights			(kg)	1	1.25	2.25	4	6.4	10.5	14	18
Moment of inertia	Magnet Side		($10^{-3}kgm^2$)	0.9	1.1	3.0	6.8	16.8	39	54	93
	Armature Side			0.11	0.18	0.5	1.45	4.8	11	26	34
Bores	min		(mm)	12	15	20	25	30	35	50	50
	$Ød^{H7}$										
	max			20	25	32	38	52	62	70	75
Number of keyways in the hub DIN 6885/1				1	1	1	2x180º	2x180º	4x90º	4x90º	4x90º
Multi keyway to DIN 5462			$Ød_1$	34H7	A8	A8	A8	A10	A10	A10	A10
				(6x1.7)	36x40	46x50	52x58	72x78	82x88	92x98	102x108
Dim. (mm)	Ø D		(mm)	82	95	114	134	166	195	210	240
	$Ød_1{}^{H7}$		(mm)	34	36	46	52	72	82	92	102
	$Ød_3{}^{H9}$		(mm)	36	42	52	60	80	90	100	110
	L		(mm)	29.5	36	45.5	52	58.5	68.5	73.5	77
	$l_{-0.1}$		(mm)	16.5	20	23	26	30	33.5	35	37
	l_1		(mm)	1.5	1.5	2	2	2.5	3	3	3
	l_3		(mm)	5.5	5.5	6	7	7	7	8.5	8.5
	l_4		(mm)	8	8	8	10	10	10	10	10
	l_5		(mm)	18.5	23	26	29	33	365	38	40
	l_8		(mm)	1.0	1.2	1.8	2	2.5	3.5	4.0	5

*** Special Voltage Clutches available on request. * Keyways BS 4235, DIN 6885 * Technical Alteration reserved.**

INDIAN PRECISION ENGINEERS

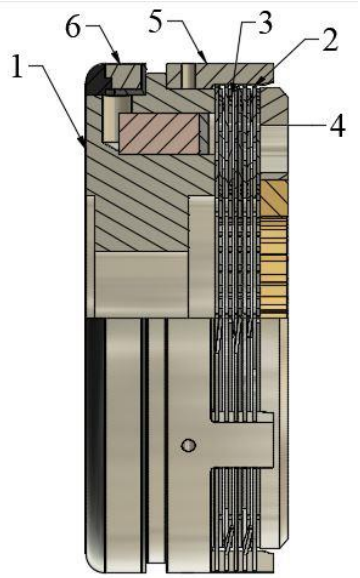

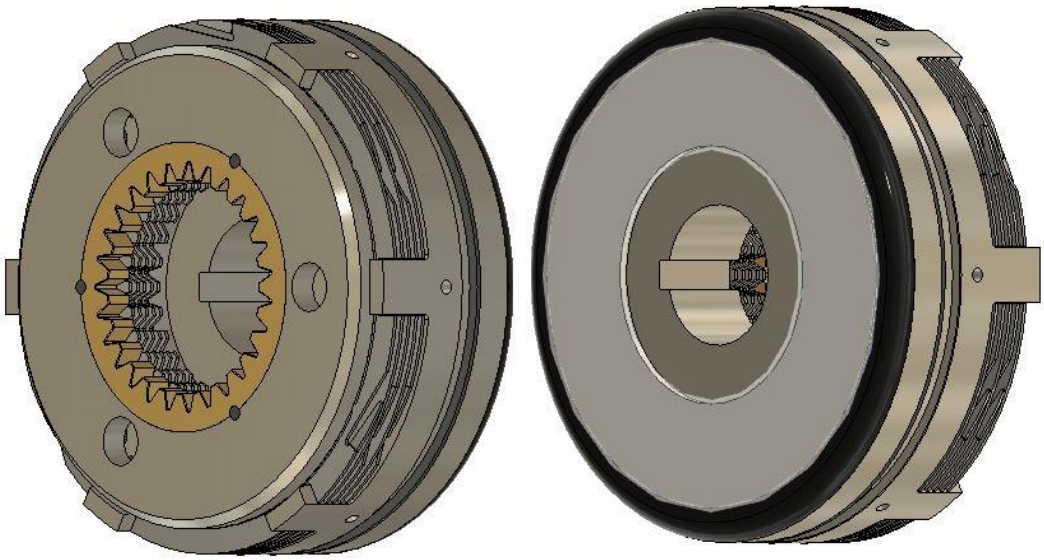

OPERATION

Carrier (5) is mounted on the coil Housing (1), and which supports the outer plate (2).
Armature Plate (4) and Inner Plates (3) are supported on the Gear Bush which must be supplied by the user (Refer page 24 for Gear Bush Tooth Profile). Coil housing (1) is fixed into the Driving shaft and Driven wheel is connected to the gear bush with inner plate and armature plate.
Energization of the coil Housing through the Slip Ring (6) by Telescopic Brush (refer page 37 for brush details) generates a magnetic field which attracts the sliding armature plate (4). The Clutch Plates (3&4) Compressed and driving torque is transmitted. To release the Clutch all that is necessary is to switch off the power supply.

APPLICATION

- Engagement or disengagement while running or while at rest. Operation in lubrication environment only. Friction of Steel-to-Steel Plates.

EXAMPLE OF INSTALLATION

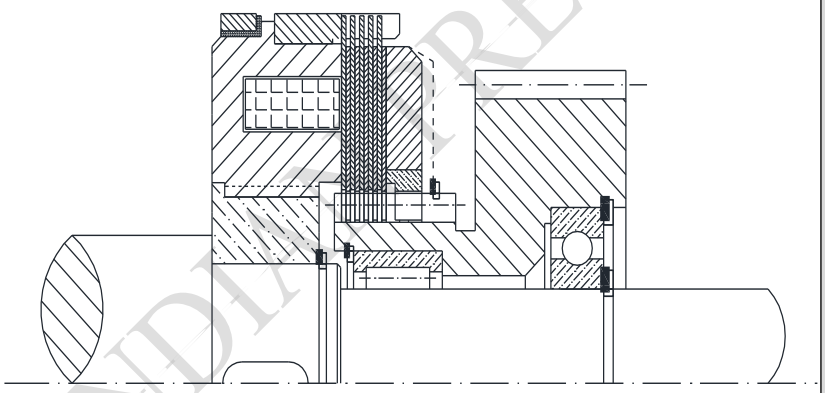

The Basic Version of Clutch with gear teeth for Torque transmission between shaft and gear wheel.

The Clutch should be fitted with the Coil Housing Body on the driving side.
Make provision for armature travel l8.
Secure gear bush axially.
For details of toothing for the gear bush "refer page 24 for Toothed profile for driving bush".

ORDER EXAMPLE.

Electromagnetic Multidisc Slip Ring Wet Run CLUTCH
TYPE: 24.502.15. 1 – 24 VDC
With Bush Bore d = 30mm / Keyway to DIN 6885

Contact Us:
☏ 080 43712388
✉ *ipe@narsipurgroup.com*
✉ *sales.ipeblr@gmail.com*

INDIAN PRECISION ENGINEERS

Part Name	Electromagnetic Multidisc Slip Ring Wet Run Clutch with Back Slot	Type	24.502.__ __.3- 24 VDC (size)

Dimensions:

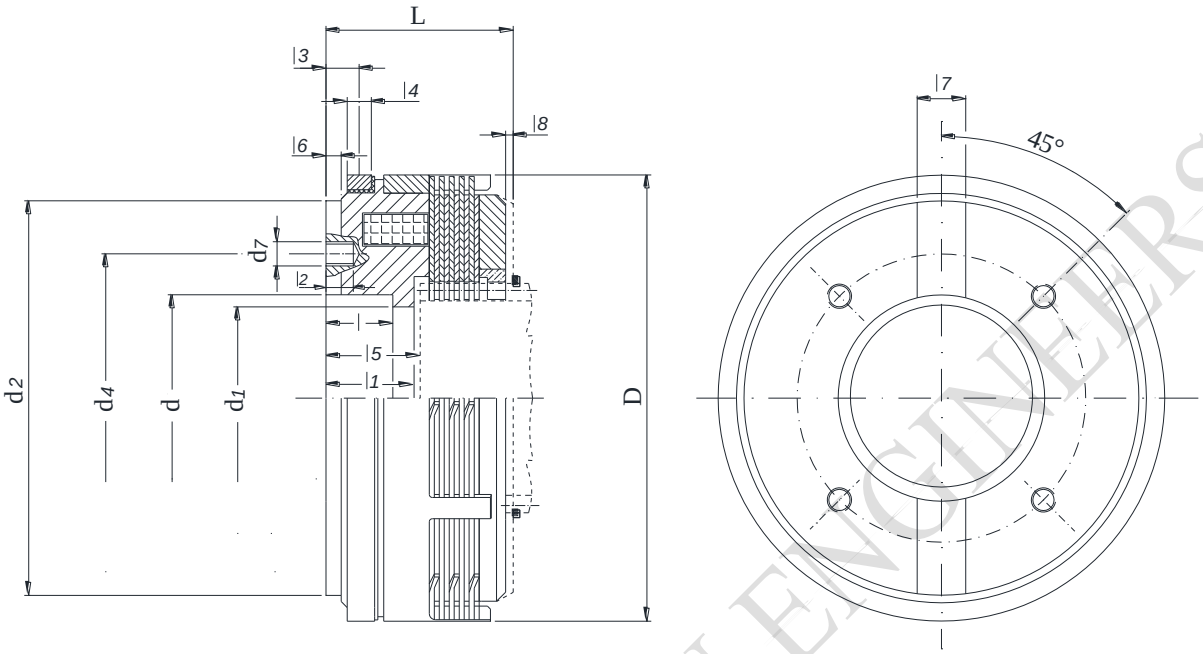

Size				11	12	15	21	22	24	26	28
Torque	Dyn	Ms	(Nm)	10	25	60	120	250	480	600	960
	Stat	Mu		20	40	100	200	400	800	1100	1600
Max. Speed			(min^{-1})	3000	3000	3000	2400	2000	2000	2000	2000
DC Voltage			(V)	***24 V DC***							
Power Consumption			(W)	17.5	18	30	30	45	66	79	88
Number of plates	Inner Plates			3	4	5	5	5	6	6	6
	Outer Plates			3	4	5	5	5	6	6	6
Weights			(kg)	1.2	1.2	2	3.5	6.5	9.3	14.5	16.7
Moment of inertia	Magnet Side		($10^{-3}kgm^2$)	1.2	1.5	3.7	7.23	19.3	40	54	95
	Armature Side			0.14	0.18	0.5	1.45	4.8	11	19	34
Dimensions (mm)	Ø D		(mm)	82	95	114	134	166	195	210	240
	Ø d^{k6}		(mm)	35	42	55	68	75	90	100	110
	Ø d_1		(mm)	31	37	45	60	65	80	90	100
	Ø d_2		(mm)	67	78	95	120	142	170	184	216
	Ø d_4 +/-0.2		(mm)	50	56	75	90	100	116	130	145
	d_7		(mm)	M5	M6	M8	M8	M10	M10	M12	M12
	L		(mm)	31	38	49.5	55	58.5	69	77.5	80
	$l^{+0.2}$		(mm)	17	20	22	22	25	28	31	32
	l_1		(mm)	19	22	27	29	30	34	39	40
	l_2		(mm)	5	5	8	8	10	12	16	18
	l_3		(mm)	7.5	7.5	11	11	13	13	14.5	14.5
	l_4		(mm)	8	8	8	10	10	10	10	10
	l_5		(mm)	20.5	25	30	32	33	37	42	43
	$l_6^{+0.1}$		(mm)	2.5	2.5	5	5	6	6	6	6
	l_7^{H7}		(mm)	12	12	14	16	20	20	20	25
	l_8		(mm)	1	1.2	1.8	2	2.5	3.5	4	5

*** Special Voltage Clutches available on request.** *** Technical Alteration reserved.**

INDIAN PRECISION ENGINEERS

OPERATION

Carrier (5) is mounted on the coil Housing (1) and which supports the outer plate (2).
Armature Plate (4) and Inner Plates (3) are supported on the Gear Bush which must be supplied by the user (Refer page 24 for Gear Bush Tooth Profile). Coil housing (1) is fixed into the Driven Wheel and the Driving shaft is connected to the gear bush. Energization of the coil Housing through the Slip Ring (6) by telescopic Brush (refer page 37 for brush details) generates a magnetic field which attracts the sliding armature plate (4). The Clutch Plates (3&4) Compressed and driving torque is transmitted. To release the Clutch all that is necessary is to switch off the power supply.

APPLICATION

- Engagement or disengagement while running or while at rest. Operation in lubrication environment only. Friction of Steel-to-Steel Plates.

EXAMPLE OF INSTALLATION

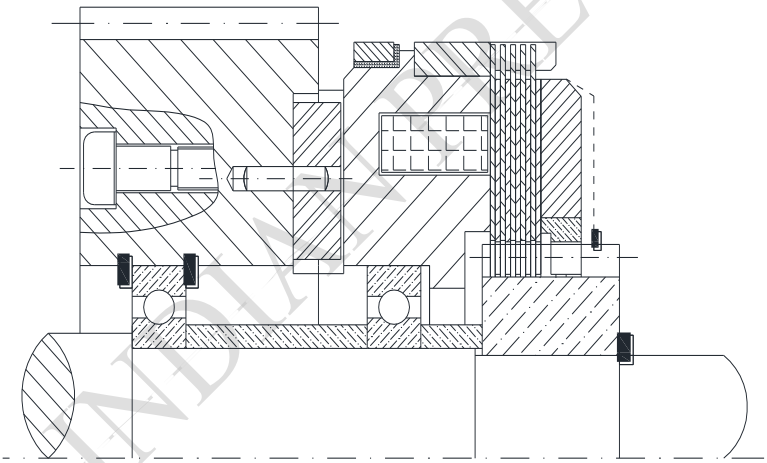

The Basic Version of Clutch with gear teeth for Torque transmission between shaft and gear wheel.

The Clutch should be fitted with the Coil Housing Body on the driving side.
The driving key must be safeguarded against centrifugal forces.
Make provision for armature travel l8.
Secure gear bush axially.
For details of toothing for the gear bush "Refer data sheet of Toothed profile for driving bush" Page No.24..

ORDER EXAMPLE.

Electromagnetic Multidisc Slip Ring Wet - Run Clutch with Back Slot
TYPE: 24.502.22. 3 – 24 VDC

Contact Us:
☏ 080 43712388
✉ ipe@narsipurgroup.com
✉ sales.ipeblr@gmail.com

INDIAN PRECISION ENGINEERS

Part Name	Electromagnetic Multidisc Slip Ring Wet Run Clutch with Gear Bush	Type	24.502.__ __.4- 24 VDC (size)

Dimensions:

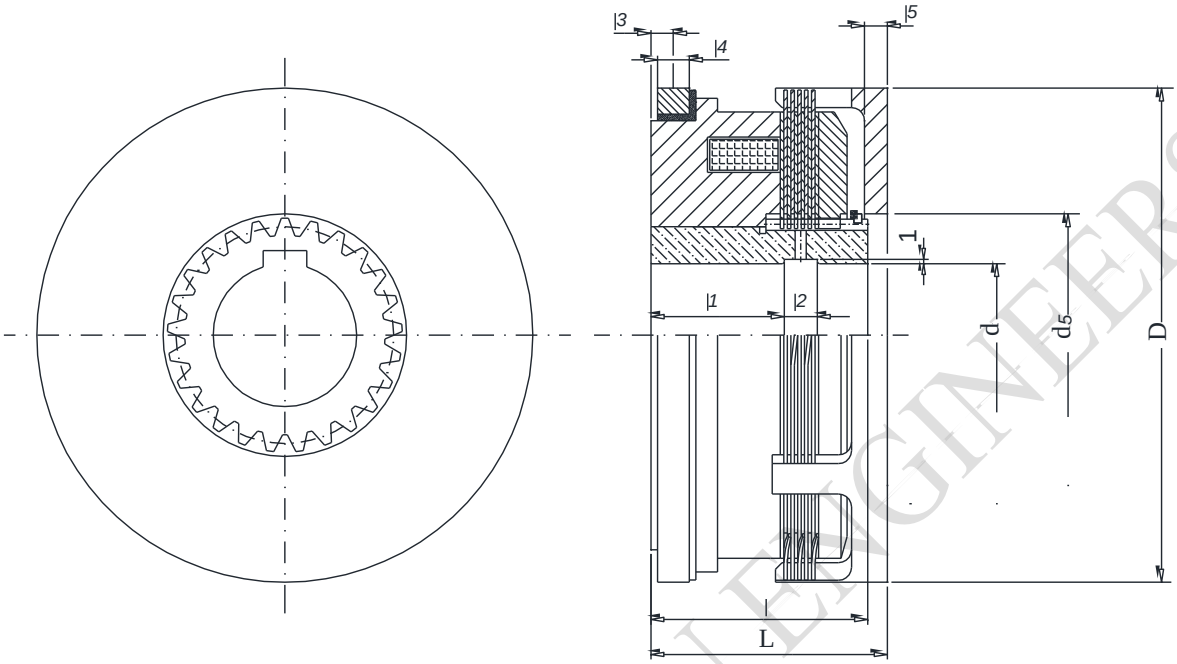

Size				11	12	15	21	22	24	26	28
Torque	dyn	Ms	(Nm)	10	25	60	120	250	480	600	960
	stat	Mu		20	40	100	200	400	800	1100	1600
Max. Speed			(min^{-1})	3000	3000	3000	2400	2000	2000	2000	2000
DC Voltage			(V)	***24 V DC***							
Power Consumption			(W)	17	18	23	30	45	66	79	88
Number of plates	Inner Plates			4	5	6	6	6	7	7	7
	Outer Plates			3	4	5	5	5	6	6	6
Weights			(kg)	1.2	1.5	2.6	4.5	7.8	13.7	23	26.5
Moment of inertia	Magnet Side		($10^{-3}kgm^2$)	1.0	1.2	3.2	7.4	20.5	48	67	117
	Armature Side			0.3	0.5	1.6	3	7	4.5	36	50
Bores Keyway to BS 4235	min	Ød^{H7}	(mm)	14	15	20	25	30	35	50	50
	Max			18	22	32	40	50	60	68	75
Dimensions (mm)	Ø D		(mm)	82	95	114	134	166	195	210	240
	Ø d_5 ^{H7}		(mm)	34	45	51	61	75	90	96	112
	L		(mm)	38	46	55	61.5	71	85	90	90
	$l_{-0.1}$		(mm)	33	41	49	56	64	76	80	80
	l_1		(mm)	18	26	29	32	39	43	40	42
	l_2		(mm)	10	10	14	10	18	20	20	20
	l_3		(mm)	6	6	6	7	7	7	8.5	8.5
	l_4		(mm)	8	8	8	10	10	10	10	10
	l_5		(mm)	5	5	6	6	8	9	12	10

* Special Voltage Clutches available on request. * Keyways BS 4235, DIN 6885 * Technical Alteration reserved.

INDIAN PRECISION ENGINEERS

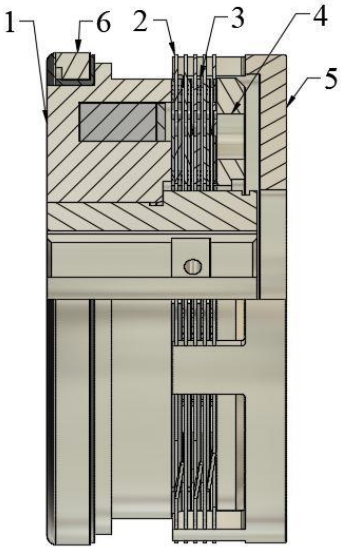

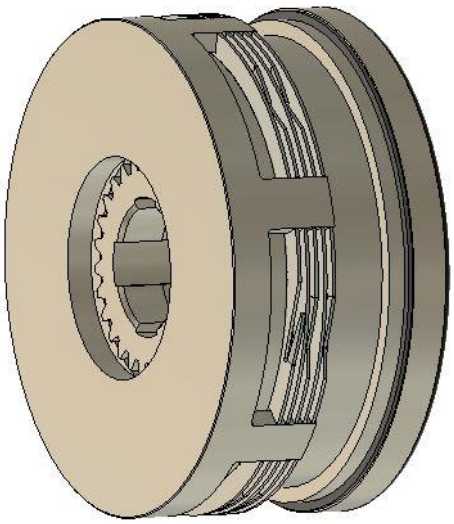

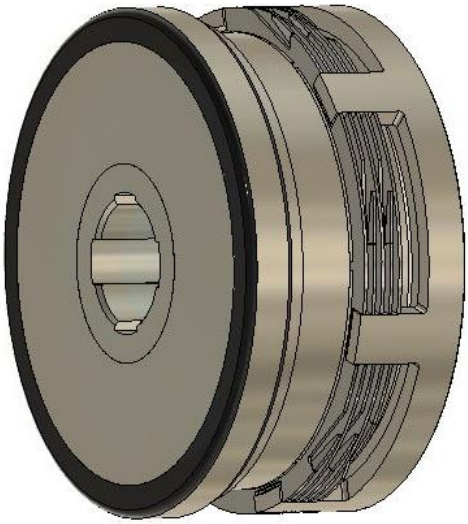

OPERATION

The Coil Housing (1) has Gear Bush which supports the inner plate (3) and the armature plate (4). The Gear bush is bored has a keyway and is pressed directly on to the driving shaft together with the coil housing. Carrier (5) supports the outer plate (2) and is bolted to the item of machinery with which it must rotate. Energization of the coil Housing through the Slip Ring (6) by telescopic Brush (refer page 37 for brush details) generates a magnetic field which attracts the sliding armature plate (6). The Clutch Plates (3&4) Compressed and driving torque is transmitted. To release the Clutch all that is necessary is to switch off the power supply.

APPLICATION

- Engagement or disengagement while running or while at rest. Operation in lubrication environment only. Friction of Steel-to-Steel Plates.

EXAMPLE OF INSTALLATION

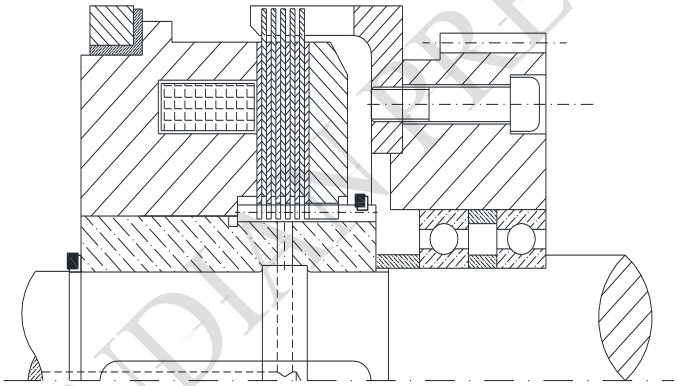

The Basic Version of Clutch with gear teeth for Torque transmission between shaft and gear wheel.

The Clutch should be fitted with the Coil Housing Body on the driving side. The Carrier must be provided with a means of axial retention so as not to be affecting the armature air gap. Carrier must be carefully centered. Carrier (5) is supplied with pilot bore. Required Mounting hole and finish bore can be made by the user.

ORDER EXAMPLE.

Electromagnetic Multidisc Slip Ring Wet Run Clutch
TYPE: 24.502.15.4 – 24 VDC
Bore d = 30mm / Keyway to DIN 6885

Contact Us:
☏ 080 43712388
✉ ipe@narsipurgroup.com
✉ sales.ipeblr@gmail.com

INDIAN PRECISION ENGINEERS

Part Name	Electromagnetic Multidisc Wet Run Brake	Type	24.512.__ __.3- 24 VDC (size)

Dimensions

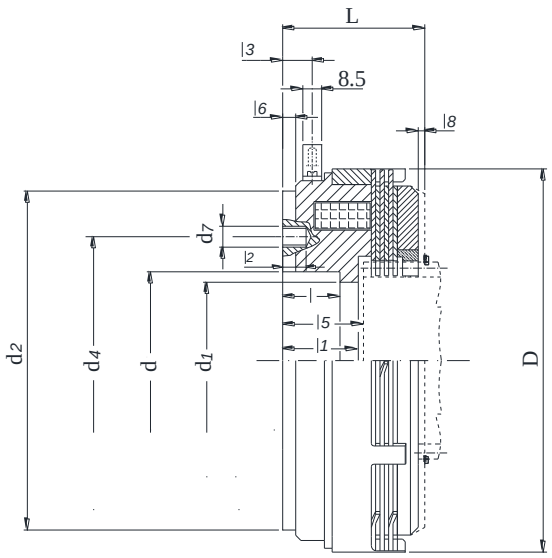

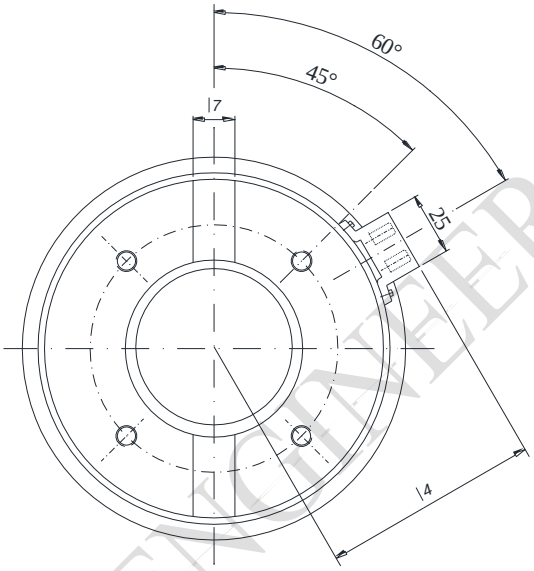

Size				11	12	15	21	22	24	26	28
Torque	Dyn	Ms	(Nm)	10	25	60	120	250	480	600	960
	Stat	Mu		20	40	100	200	400	800	1100	1600
Max.Speed			(min^{-1})	3000	3000	3000	2400	2000	2000	2000	2000
DC Voltage			(V)	24 V DC							
Power Consumption			(W)	18	18	30	30	45	66	79	88
Number of plates	Inner Plates			3	4	5	5	5	6	6	6
	Outer Plates			3	4	5	5	5	6	6	6
Weights			(kg)	1.0	1.2	2	3.5	6.5	9.3	12.3	16.7
Moment of inertia (Armature side)			($10^{-3}kgm^2$)	0.14	0.18	0.5	1.45	4.8	11	21	34
Dimensions (mm)	Ø D		(mm)	82	95	114	134	166	195	210	240
	Ø d^{k6}		(mm)	35	42	55	68	75	90	100	110
	Ø d_1		(mm)	31	37	45	60	65	80	90	100
	Ø d_2		(mm)	67	78	95	120	142	170	184	216
	Ø d_4		(mm)	50	56	75	90	100	116	130	145
	Ø d_7		(mm)	M5	M6	M8	M8	M10	M10	M12	M12
	L		(mm)	31	38	49.5	55	58.5	69	77.5	80
	$l^{+0.20}$		(mm)	17	20	22	22	25	28	31	32
	l_1		(mm)	19	22	27	29	30	34	39	40
	l_2		(mm)	5	5	8	8	10	12	16	18
	l_3		(mm)	5	6	12	13	12.5	12.5	14	15.5
	l_4		(mm)	56.5	62.5	69.5	78	93	107	120.5	126
	l_5		(mm)	20.5	25	30	32	33	37	42	43
	$l_6^{+0.10}$		(mm)	2.5	2.5	5	5	6	6	6	6
	l_7^{H7}		(mm)	12	12	14	16	20	20	20	25
	l_8		(mm)	1.0	1.2	1.8	2	2.5	3.5	4	5

*** Special Voltage Brakes available on request.** *** Brakes with 1000mm leads available as an option.**
*** Technical Alteration reserved**

INDIAN PRECISION ENGINEERS

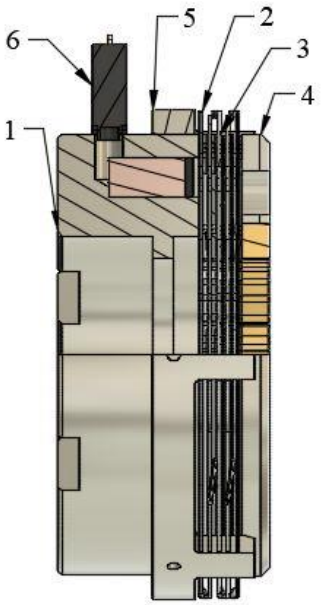

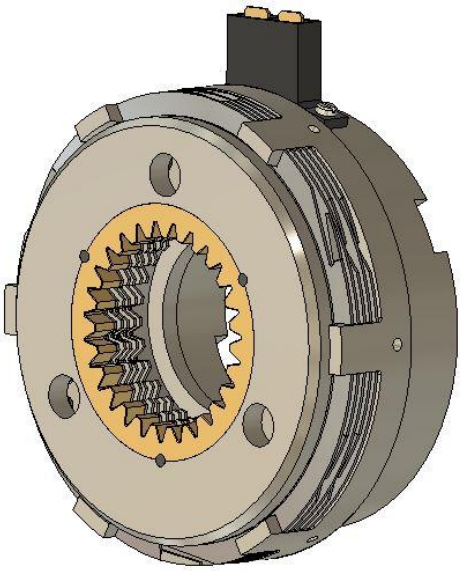

OPERATION

Carrier (5) is mounted on the coil Housing (1) and which supports the outer plate (2). Armature Plate (4) and Inner Plates (3) are supported on the gear Bush which must be supplied by the user (Refer Page 24 for Gear Bush tooth Profile). Coil housing (1) is fixed into the Machine Housing (stationary Part) and load shaft is connected to the gear bush. Energization of the coil Housing through the Connector (6) generates a magnetic field which attracts the sliding armature plate (4). The Clutch Plates (3&4) are thus Compressed, and the braking torque is transmitted. To release the brake, all that is necessary is to switch off the power supply.

APPLICATION

- Braking and release while running or at rest. Operation in lubrication environment only.
  Friction of Steel-to-Steel Plates.

EXAMPLE OF INSTALLATION

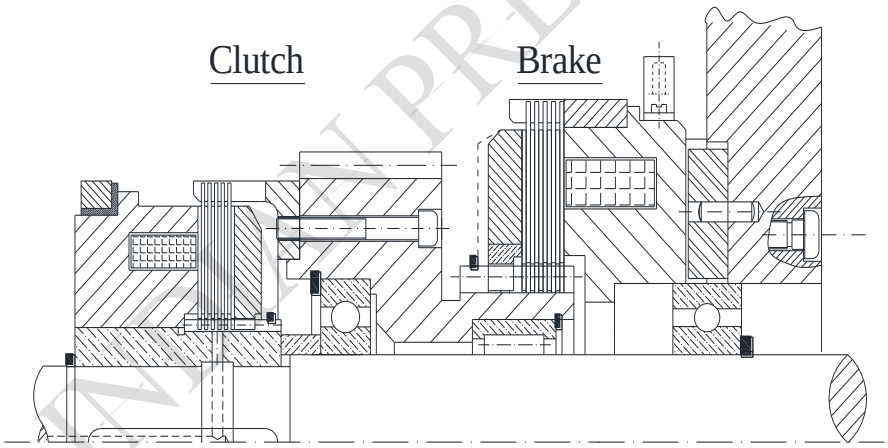

The Basic Version of BRAKE with Clutch and gear wheel.

The Coil Housing of the brake is secured and located centrally to the end face of the housing.
A slot is provided on coil housing back to help in locating the Coil Housing. Make provision for armature travel l8.
Secure gear bush axially.
For details of toothing for the gear bush "refer data sheet of Toothed profile for driving bush" Page No.24..

ORDER EXAMPLE.

Electromagnetic Multidisc Slip Ring Wet Run BRAKE
TYPE: 24.512.12.3 – 24 VDC

Contact Us:
☏ 080 43712388
✉ *ipe@narsipurgroup.com*
✉ *sales.ipeblr@gmail.com*

INDIAN PRECISION ENGINEERS

Toothed Profile for driving Bush

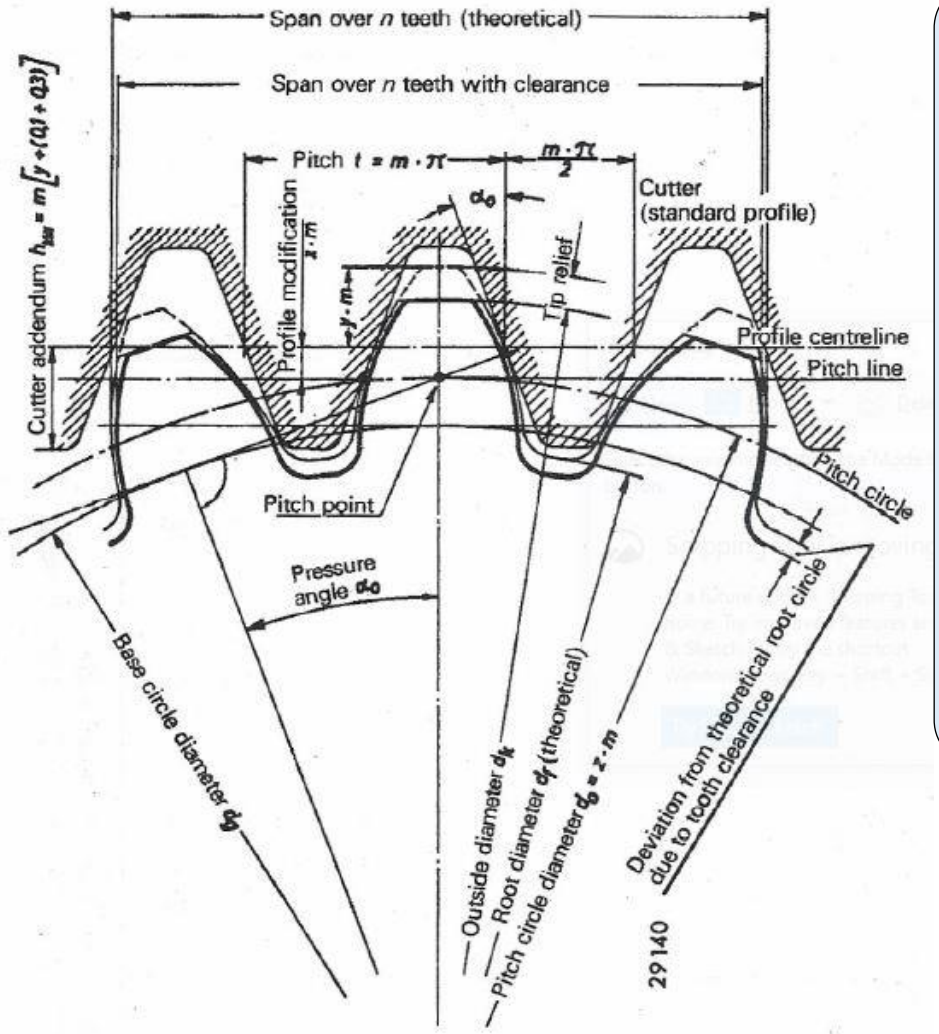

All necessary data have been given in page No.24 to facilitate machining of gear teeth for Driven Gear Bush (customer components), which is applicable to

24.502. __ __ __. 1,
24.502. __ __ __ .3, &
24.512. __ __ __ .3.

Z = No. of Teeth,
M = Module,
α = Pressure Angle (20°),
dk = Outside Diameter
df = Root Diameter,
x = Pitch Error

TOOTH PROFILE FOR TOOTHED DRIVING BUSH (Drive Bush for inner Clutch Plates)								
Size	No.of teeth Z	Module m	Tip dia d_k	Root dia d_k	Tooth Width W_n	Span Measurement over n teeth	Pitch error X	Teeth length l_z
11	20	1.5	32.2	25.95	11.38	3	-0.18	9.5
12	27	1.5	43.5	37.65	16.37	4	+0.3	12
15	27	1.75	50.5	43.96	19.11	4	+0.31	18.5
21	*28	2	60.5	52.64	22.01	4	+0.41	21.5
21	*31	2	66.4	58.68	22.1	4	+0.42	21.5
22	27	2.5	73.2	63.4	27.51	4	+0.43	23.5
24	33	2.5	88.2	78.4	27.72	4	+0.43	30
26	36	2.5	94.8	84.9	34.87	5	+0.23	32.5
28	42	2.5	110	98.15	34.48	5	-0.12	33
Pitch diameter do = zm, Pressure angle=20°, Outer toothing hardness of bush teeth 59-62HRC;0.2 to 0.6 deep.								
INDEX:	(1) 28 teeth only for sizes 1				(2) 31 teeth only for sizes 3			

Part Name	Electromagnetic Multidisc Slip Ring Dry Run Clutch	Type	ELKa. __ ___- 24 VDC (size)

Dimensions

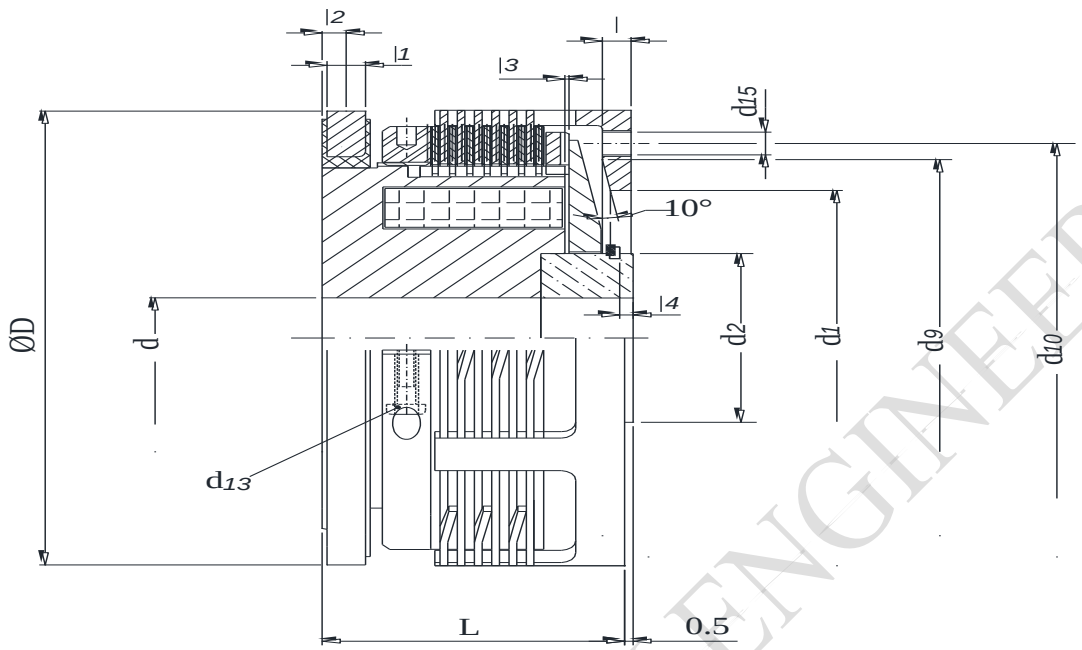

Size			2.5	4	6	10	20	40	60	80	120	160
Torque	Oil Running	Ms dyn	25	40	60	100	200	400	600	800	1200	1600
		Mu stat	28	45	72	120	240	480	720	960	1450	1950
		(Nm)										
	Dry Running	Ms dyn	32	50	80	135	270	540	800	1000	1600	2100
		Mu stat	40	65	105	175	350	700	1050	1300	2100	2700
Max. Speed	Oil Running	(min^{-1})	3000	3000	3000	2500	2500	1500	1500	1500	1000	1000
	Dry Running		3000	3000	2500	2000	2000	1500	1500	1000	1000	1000
DC Voltage		(V)	24 V DC									
Power Consumption		(W)	18	22	33	43	63	83	100	122	125	142
Weight		(Kg)	1.7	2.3	3.1	5.8	8.1	12.8	17.5	23.2	33	50
Moment of Inertia	Magnet Side	($10^{-3}kgm^2$)	1.49	2.3	3.43	7	18.7	33.8	65.5	115	183	403
	Armature Side		0.39	0.8	1.13	3.55	7.83	15.3	25.3	47.3	75	150
Number Of Plates	Inner Plate	(Nos)	6	7	6	7	7	6	6	6	6	6
	Outer Plate	(Nos)	5	6	5	6	6	5	5	5	5	5
Bores	Ø d^{H7} / Keyway to BS 4325	Min	16	18	20	25	30	35	40	50	50	50
		Max	30	30	34	40	52	58	65	75	80	85
Dimensions (mm)		Ø D	95	105	115	140	166	195	214	240	264	295
		Ø d_1 H7	60	70	80	100	120	130	155	180	200	225
		Ø d_2	40	40	45	52	65	72	80	95	100	105
		Ø d_8	56	66	76	96	115	125	148	170	190	215
		Ø d_9	82	90	100	110	135	160	190	210	240	260
		Ød_{10}	82	90	100	120	140	170	190	215	240	265
		Ød_{13} DIN 912	**M4**	**M4**	**M5**	**M5**	**M6**	**M6**	**M6**	**M6**	**M6**	**M8**
		Ød_{15} DIN 6912	**4xM6**	**4xM6**	**4xM6**	**4xM8**	**4xM8**	**4xM12**	**4xM12**	**4xM12**	**4xM12**	**6XM16**
		L	45	50	53	63	67	73	81	90	101	110
		l_3	0.3	0.3	0.4	0.7	0.8	0.9	1	1	1.1	1.2
		l	4	4.5	5	6	6.5	8	9	10	11	12
		l_1	7	7	8	8	8	8	8	8	8	9
		l_2	4.5	4.5	5	5	5	5	5	5	5	6
		l_4	2	2.5	2.5	3.5	3.5	4.5	4.5	5.5	5.5	6.5

*** Special Voltage Clutches available on request. * Keyways BS 4235, DIN 6885 * Technical Alteration reserved.**

INDIAN PRECISION ENGINEERS

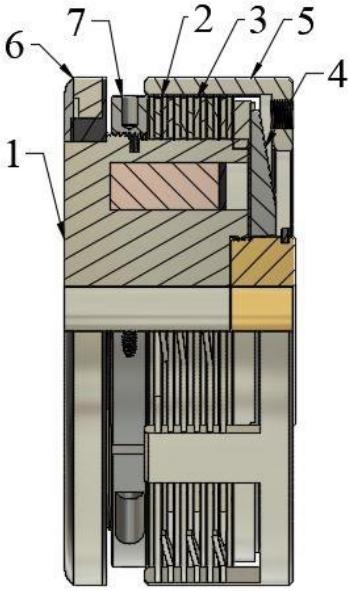

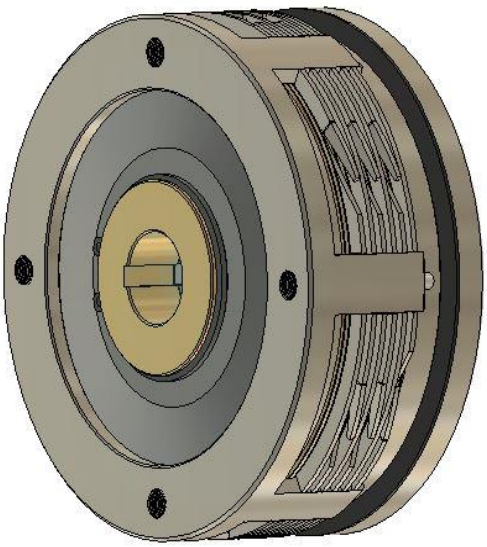

OPERATION

The Coil Housing (1) has Gear teeth on its outer periphery, which supports the inner plate (3) and the armature plate (4). The Coil Housing is bored has a keyway and is pressed directly on to the driving shaft. Carrier (5) supports the Outer Plate (2) and is bolted to the item of machinery with which it must rotate. Energization of the coil Housing through the Slip Ring (6) by Telescopic Brush (refer page 37 for brush details) generates a magnetic field which attracts the sliding armature plate (4). The Proper positioning of the adjustable nut (7) determines the airgap between coil housing face and armature face. The Clutch Plates are thus compressed and driving torque is transmitted. To release the Clutch, all that is necessary is to switch off the power supply.

APPLICATION

- Engagement or disengagement while running or while at rest. Operation in Dry or lubrication environment. Friction of Steel to Sintered Plates.

EXAMPLE OF INSTALLATION

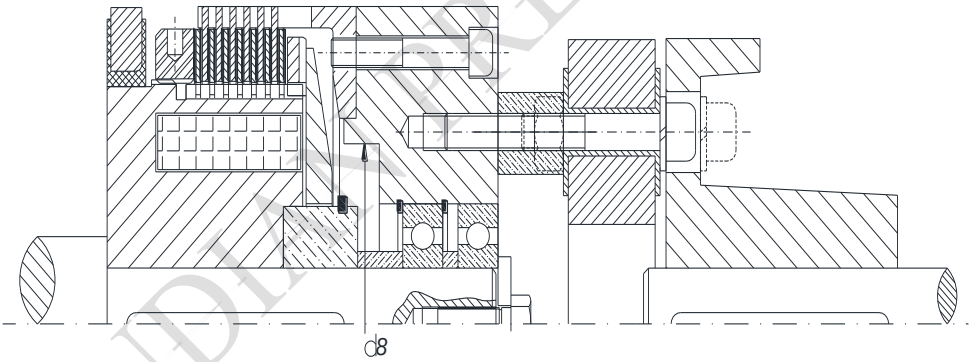

The Basic Version of Clutch combination with flexible coupling.

Always install the clutch with the magnet body on the driving side. Armature uppermost when installing clutch vertically. Clutch with negative slipring: external earth connection. Connection of two shafts only by means of flexible coupling. Carrier (5) is supplied with pilot bore. Required Mounting hole and finish bore can be done by the user. Carefully maintain d8 dimension in machine flange or gear wheel.

ORDER EXAMPLE.

Electromagnetic Multidisc Slip Ring Dry Run Clutch
TYPE: ELKa 10 – 24 VDC
Bore d = 25mm / Keyway to BS 4325

Contact Us:
☏ 080 43712388
✉ *ipe@narsipurgroup.com*
✉ *sales.ipeblr@gmail.com*

INDIAN PRECISION ENGINEERS

Part Name	Electromagnetic Multidisc Stationary Dry Run Clutch	Type	ELSa.__ ___- 24 VDC (size)

Dimensions

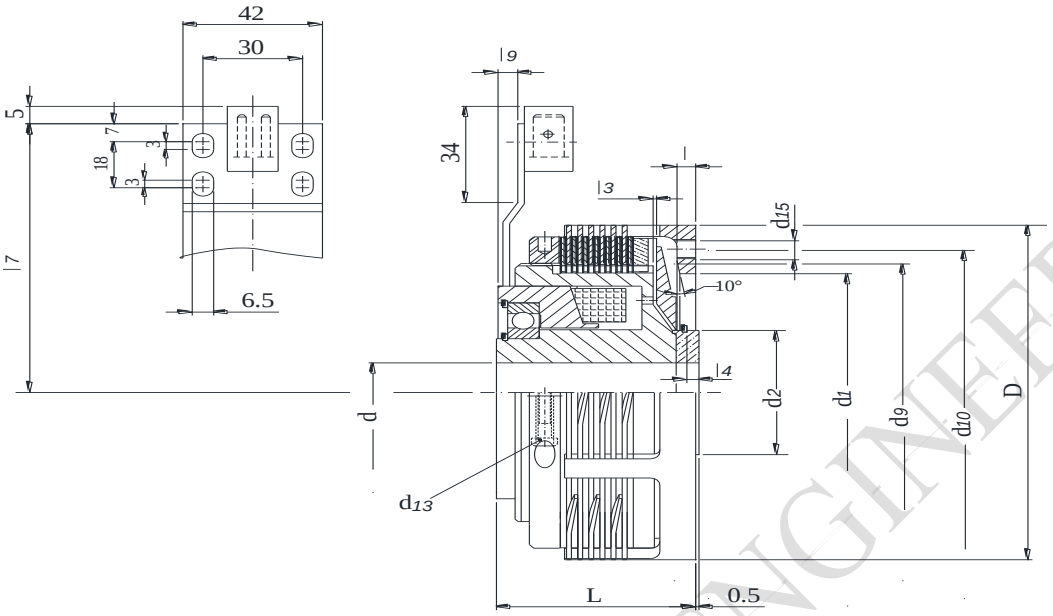

Size			2.5	4	6	10	20	40	60	80	120	160
Torque	Oil Running	Ms dyn	25	40	60	100	200	400	600	800	1200	1600
		Mu stat	28	45	72	120	240	480	720	960	1450	1950
		(Nm)										
	Dry Running	Ms dyn	32	50	80	135	270	540	800	1000	1600	2100
		Mu stat	40	65	105	175	350	700	1050	1300	2100	2700
Max.Speed	Oil Running	(min^{-1})	3000	3000	3000	2500	2500	1500	1500	1500	1000	1000
	Dry Running		1500	1500	1500	1500	1500	1500	1000	1000	1000	1000
DC Voltage		(V)	24 V DC									
Power Consumption		(W)	17	29	30	43	61	80	95	105	115	140
Weight		(Kg)	1.5	2.1	2.8	5.3	7.5	12	16.5	22	31.5	48
Moment of inertia	Magnet Side	($10^{-3}kgm^2$)	1.08	1.88	3.18	4.7	13.4	24.5	50.3	86.3	140	328
	Armature Side		0.39	0.8	1.13	3.55	7.83	15.3	25.3	47.3	75	150
Number of plates		Inner Plates	6	7	6	7	7	6	6	6	6	6
		Outer Plates	5	6	5	6	6	5	5	5	5	5
Bores	Ø d ^{H7} / Keyway to BS 4325	Min	16	18	20	25	30	35	40	50	50	50
		Max	30	30	25	35	48	50	65	68	80	85
Dimensions (mm)	Ø D		95	105	115	140	166	195	214	240	264	295
	Ø d_1^{H7}		60	70	80	100	120	130	155	180	200	225
	Ø d_2		40	40	45	52	68	80	85	100	105	110
	Ø d_8		56	66	76	96	115	125	148	170	190	215
	Ø d_9		82	90	100	110	135	160	190	210	240	260
	Ø d_{10}		82	90	100	120	140	170	190	215	240	265
	Ø d_{13}	DIN 912	M4	M4	M5	M5	M6	M6	M6	M6	M6	M8
	Ø d_{15}		4xM6	4xM6	4xM6	4xM8	4xM8	4xM12	4xM12	4xM12	4xM12	6xM16
	L		45	50	53	63	67	73	81	90	101	110
	l_3		0.2	0.3	0.3	0.4	0.5	0.5	0.6	0.7	0.7	0.8
	l		4	4.5	5	6	6.5	8	9	10	11	12
	l_4		2	2.5	2.5	3.5	3.5	4.5	4.5	5.5	5.5	6.5
	l_7		77	80	82	97.5	108	123	132.5	144	158.5	168
	l_9		4	4	4	4	4	4	4	4	5	5

*** Special Voltage Clutches available on request. * Keyways BS 4235, DIN 6885 * Technical Alteration reserved.**

INDIAN PRECISION ENGINEERS

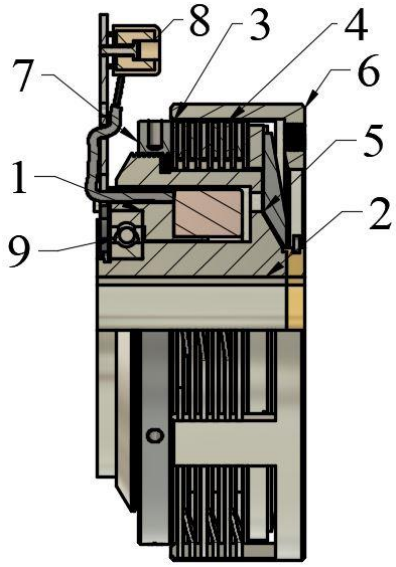

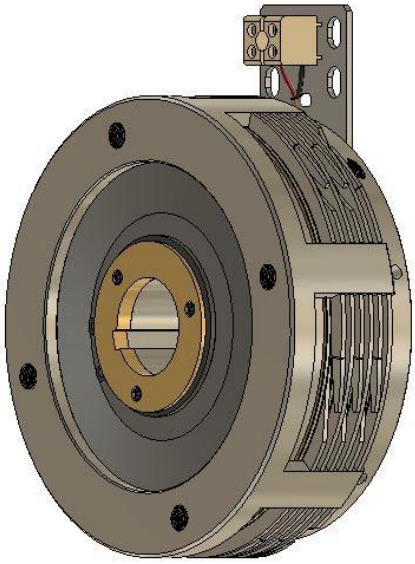

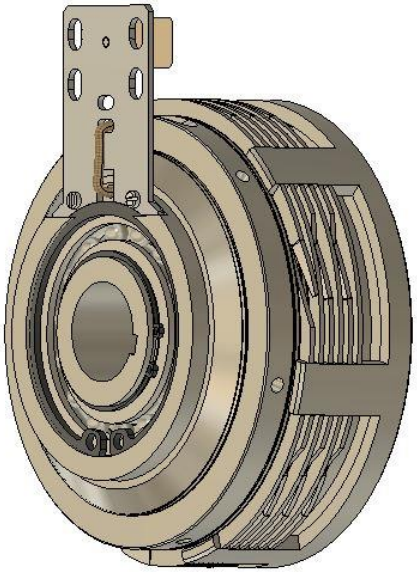

OPERATION

The Rotor (2) has Gear teeth on its outer periphery, which supports the inner plate (4) and the armature plate (5). The Rotor is bored has a keyway and is pressed directly on to the driving shaft. Carrier (5) supports the Outer Plate (2) and is bolted to the item of machinery with which it must rotate. Coil Housing (1) potted with coil is centered over the rotor by means of ball bearing.

Energization of the coil Housing through the Connector (8) generates a magnetic field which attracts the sliding armature plate (5). The Proper positioning of the adjustable nut (7) determines the airgap between coil housing face and armature face. The Clutch Plates are thus compressed and driving torque is transmitted. To release the Clutch all that is necessary is to switch off the power supply.

APPLICATION

- Engagement or disengagement while running or while at rest. Operation in Dry or lubrication environment. Friction of Steel to Sintered Plates.

EXAMPLE OF INSTALLATION

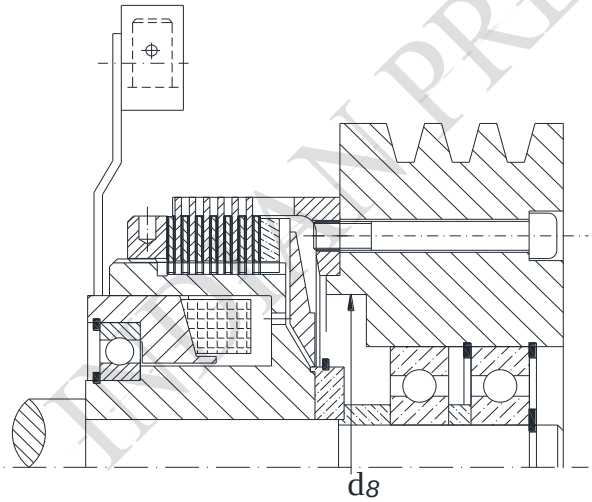

The Basic Version of Clutch combination with Pulley.

Armature plate must be uppermost when installing clutch vertically.
Carefully maintain d8 dimension in machine flange or gear wheel. Install the clutch in such a way that the adjusting nut is readily accessible.

ORDER EXAMPLE.

Electromagnetic Multidisc Slip Ring Dry Run Clutch
TYPE: ELKa 40 – 24 VDC
Bore d = 40mm / Keyway to BS 4325

Contact Us:
☏ 080 43712388
✉ ipe@narsipurgroup.com
✉ sales.ipeblr@gmail.com

INDIAN PRECISION ENGINEERS

Part Name	Electromagnetic Multidisc Dry Run Brake	Type	ELKa. __ __B- 24 VDC (size)

Dimensions

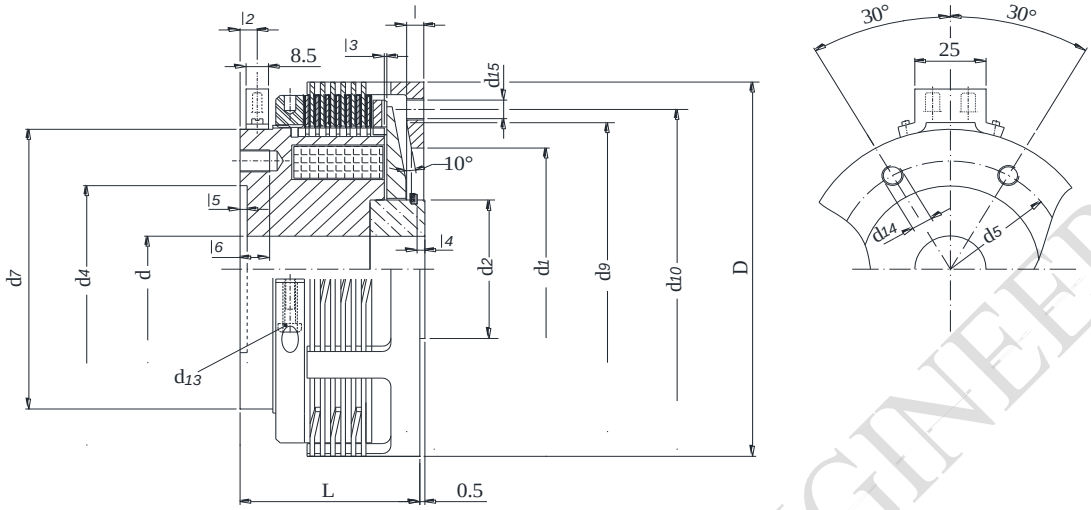

Size			2.5	4	6	10	20	40	60	80	120	160
Torque	Oil Running	Ms dyn	25	40	60	100	200	400	600	800	1200	1600
		Mu stat		45	72	120	240	480	720	960	1450	1950
		(Nm)										
	Dry Running	Ms dyn	32	50	80	135	270	540	800	1000	1600	2100
		Mu stat	40	65	105	175	350	700	1050	1300	2100	2700
Max.Speed	Oil Running	(min^{-1})	3000	3000	3000	2500	2500	1500	1500	1500	1000	1000
	Dry Running		3000	3000	2500	2000	2000	1500	1500	1000	1000	1000
DC Voltage		(V)	24 V DC									
Power Consumption		(W)	18	22	33	43	63	83	100	122	125	142
Weight		(Kg)	1.7	2.3	3.1	5.8	8.1	12.8	17.5	23.2	33	50
Moment of Inertia	Armature Side	($10^{-3}kgm^2$)	0.39	0.8	1.13	3.55	7.83	15.3	25.3	47.3	75	150
Number Of Plates	Inner Plate	(Nos)	6	7	6	7	7	6	6	6	6	6
	Outer Plate	(Nos)	6	7	6	7	7	6	6	6	6	6
Bores	Ø d^{H7}	Min	16	18	20	25	30	35	40	50	50	50
		Max	32	32	36	42	52	62	68	80	85	90
Dimensions (mm)	Ø D		95	105	115	140	166	195	214	240	264	295
	Ø d_1 ^{H7}		60	70	80	100	120	130	155	180	200	225
	Ø d_2		40	40	45	52	65	72	80	95	100	105
	Ø d_4 ^{H7} Max		51	54	58	75	90	110	120	140	145	160
	Ø d_5 Max		64	73	76	93	108	135	150	170	186	205
	Ø d_7		74	82	86	105	120	150	166	185	202	225
	Ø d_8		56	66	76	96	115	125	148	170	190	215
	Ø d_9		82	90	100	110	135	160	190	210	240	260
	Ød_{10}		82	90	100	120	140	170	190	215	240	265
	Ød_{13} DIN 912		M4	M4	M5	M5	M6	M6	M6	M6	M6	M8
	Ød_{14}		M6	M6	M6	M8	M8	M12	M12	M12	M12	M16
	Ød_{15}		4xM6	4xM6	4xM6	4xM8	4xM8	4xM12	4xM12	4xM12	4xM12	6XM16
	L		45	50	53	63	67	73	81	90	101	110
	l		4	4.5	5	6	6.5	8	9	10	11	12
	l_2		4.5	4.5	5	5	5	5	5	5.5	5.5	6
	l_3		0.3	0.3	0.4	0.7	0.8	0.9	1	1	1.1	1.2
	l_4		2	2.5	2.5	3.5	3.5	4.5	4.5	5.5	5.5	6.5
	l_5		3	3	3	4	4	4	5	5	5	5
	l_6 Max		8	8	8	10	13	14	17	17	19	23

* Special Voltage Brakes available on request. * Keyways BS 4235, DIN 6885 * Technical Alteration reserved.

INDIAN PRECISION ENGINEERS

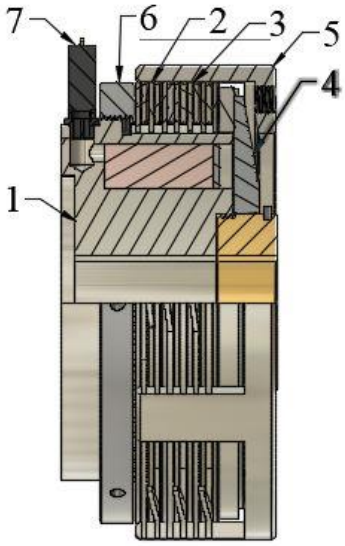

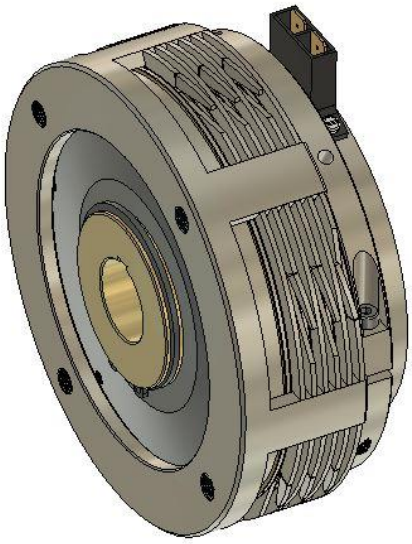

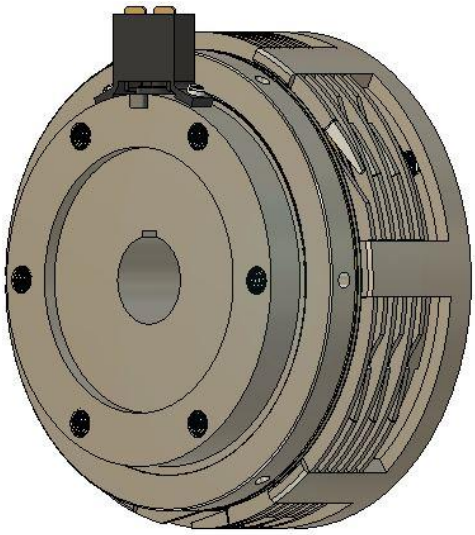

OPERATION

The Coil Housing (1) has Gear teeth on its outer periphery, which supports the inner plate (3) and the armature plate (4). The Coil Housing is fixed to the machine housing and should be stationary. Carrier (5) supports the Outer Plate (2) and is bolted to the item of machinery with which it must rotate. Energization of the coil Housing through the connector (7) generates a magnetic field which attracts the sliding armature plate (4). The Proper positioning of the adjustable nut (7) determines the airgap between coil housing face and armature face. The Clutch Plates are thus compressed, and braking torque is transmitted. To release the brake, all that is necessary is to switch off the power supply.

APPLICATION

- Braking and release while running or at rest. Operation in Dry or lubrication environment.
  Friction of Steel to Sintered Plates.

EXAMPLE OF INSTALLATION

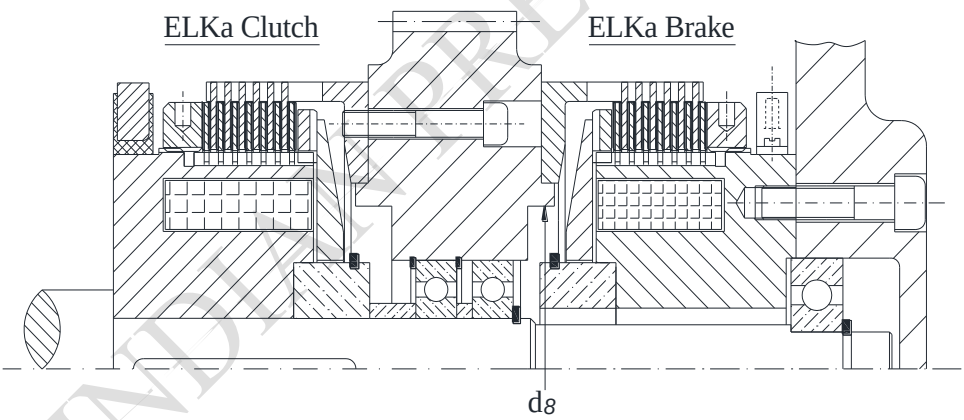

Combination of CLUTCH and BRAKE Type ELKa

The Coil Housing of the brake is secured and located centrally to the end face of the housing. Install the brake in such a way that the adjusting nut is readily accessible. Carrier (5) is supplied with pilot bore. Required Mounting hole and finish bore can be done by the user.

ORDER EXAMPLE.

Electromagnetic Multidisc Dry Run BRAKE
TYPE: ELKa 6 – 24 VDC
Bore d = 20mm, d_4 = 50mm

Contact Us:
☏ 080 43712388
✉ *ipe@narsipurgroup.com*
✉ *sales.ipeblr@gmail.com*

INDIAN PRECISION ENGINEERS

Part Name	Electromagnetic Multidisc Fail-Safe Brake (Spring Loaded Brake)	Type	24.513. __ __- 24 VDC (size)

Dimensions:

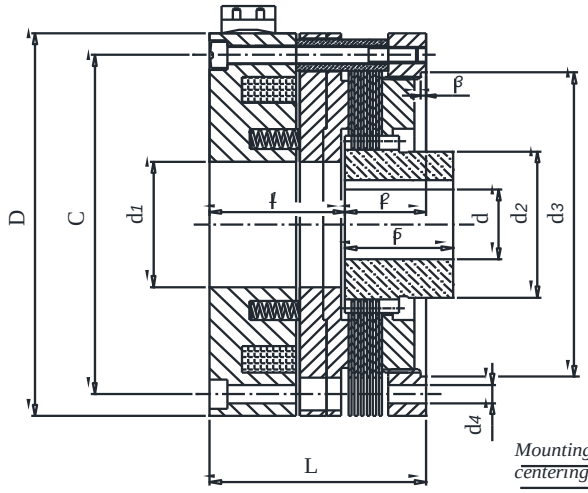

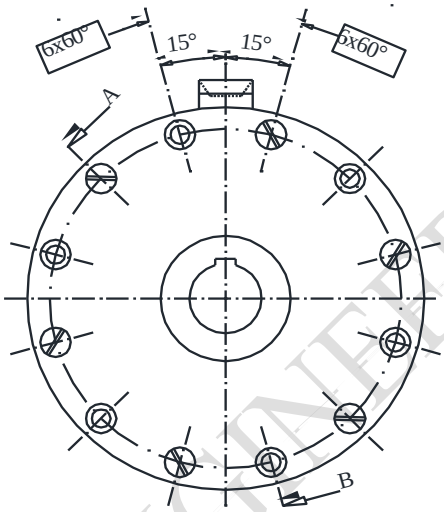

Mounting Arrangements suitable for centering on Brake Locking Plate (Ød3 (H7).

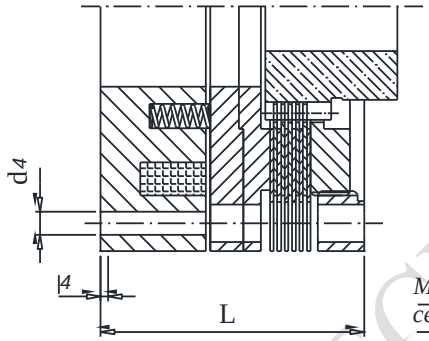

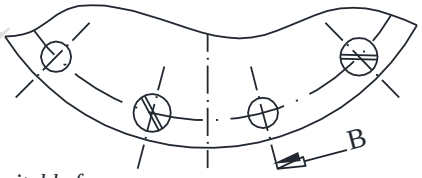

Mounting Arrangements suitable for centering on Brake Coil Housing Body (ØD (f7).

Size			11	12	15	21	22	24
Torque Dynamic	Ms	(Nm)	7.5	17.5	45	80	170	350
DC Voltage		(V)	***24 V DC***					
Power Consumption		(W)	28	39	43	54	108	124
Weights	*(approx)*	(kg)	2	3.5	5.5	11	16	26
Bores	Ød H7	Max	28	36	44	60	65	70
		Min	20	30	30	40	45	50
Moment of inertia (Inner Gear Bush side)		(10^{-3}kgm^2)	0.1	0.2	0.5	1.6	2.4	4.3
	Ø D f7	(mm)	100	115	135	165	190	220
	Ø d_1	(mm)	31	39	45	62	67	72
	Ø C	(mm)	88	100	120	150	170	195
	Ø d_2 Max.	(mm)	37	44	55	75	77	85
	Ø d_3 H7	(mm)	75	90	110	140	160	180
	Ø d_4	(mm)	5.5	5.5	6.5	6.5	8.5	10.5
	L	(mm)	61	65	75	95	105	120
	l_1	(mm)	41	41.5	48	60.5	67.5	75
	l_2	(mm)	20	23.5	27	34.5	37.5	45
	l_3	(mm)	2.5	2.5	2.5	2.5	3	3
	l_4	(mm)	1.5	1.5	1.5	2	3	3
	l_5	(mm)	30	35	40	45	55	60

* Brakes with 1000mm leads available as an option. * Brakes available for both WET & DRY Operation.
* Special Voltage Brakes available on request. * Keyways BS 4235, DIN 6885 * Technical Alteration reserved.

INDIAN PRECISION ENGINEERS

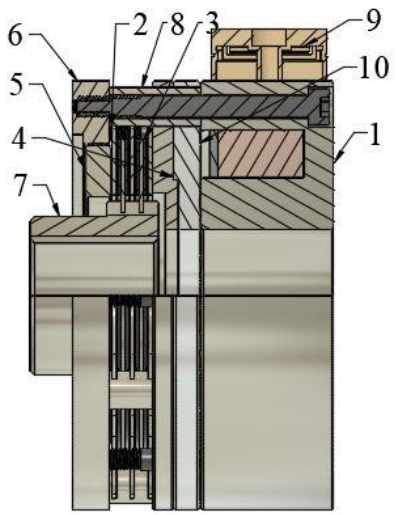

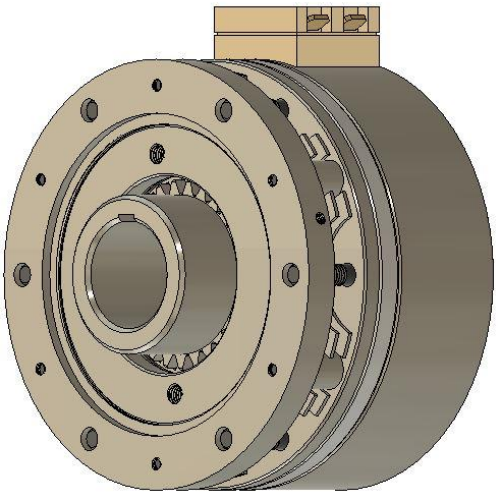

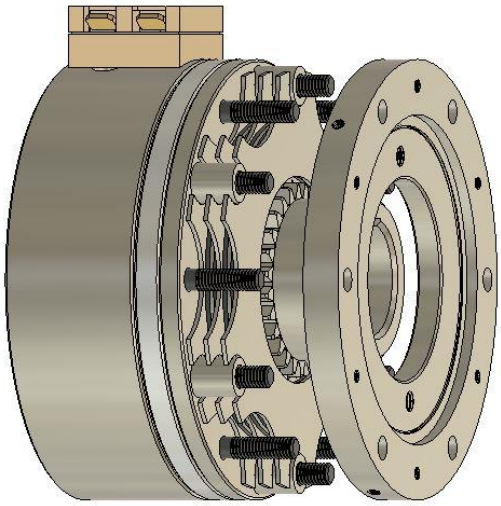

OPERATION

The Coil Housing (1) is the fixed part consisting of Armature Plate (4), Outer Plate (2), Adjustable Nut (5) and Locking Plate (6). Gear Bush (7) supports the Inner Plate, and which rotates with the Shaft. Numbers of springs (10) are placed in the coil housing on suitable PCD. A small air gap will be maintained between the Coil housing face and armature plate face.

When coil Housing potted with the coil energized by the connector (9), generates a magnetic field which attracts the sliding armature Plate (4), while compressing the springs (10) the clutch plates (2 & 3) are released and the brake is thus released.

To apply the brake, it is only necessary to switch off the power supply, the sliding armature pushed back by the spring presses the clutch plates (2& 3) and transmits the braking torque.

APPLICATION

- Braking and release while running or at rest. Braking safety in case of an accidental power failure.
  STEEL TO SPECIAL FRICTION LINING for dry running. The plates must be kept free of lubricants.
  STEEL TO STEEL for Wet Operation.

EXAMPLE OF INSTALLATION

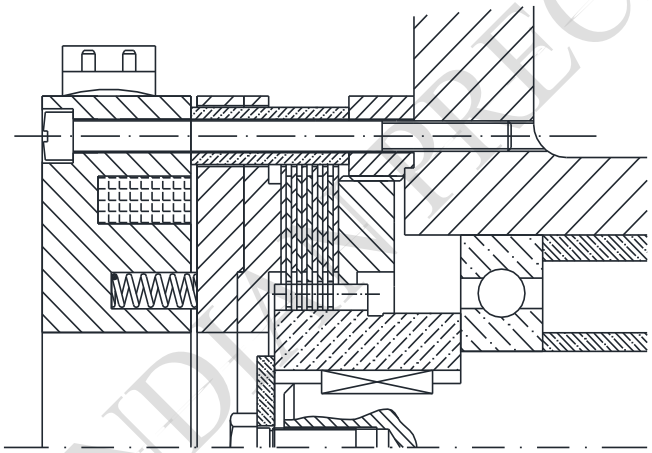

Centering On Ø d$_3$ ^{H7}

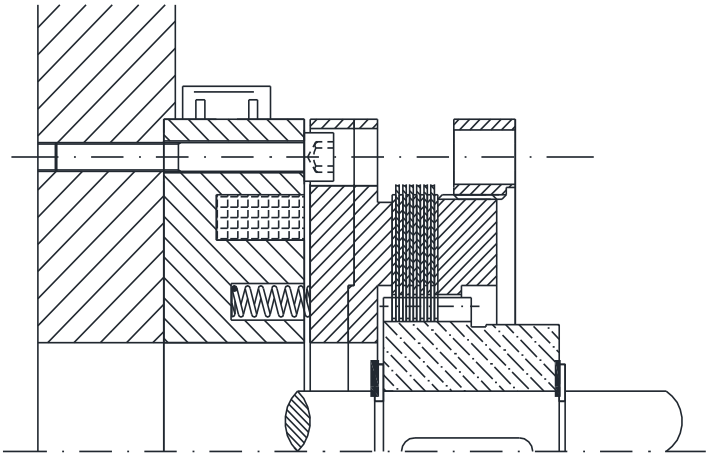

Centering On Ø D ^{f7}

ORDER EXAMPLE.

Electromagnetic Multidisc Fail-Safe BRAKE For Wet Running
TYPE: 24.513.15 – 24 VDC
Bore d = 30mm / Keyway BS 4235

Contact Us:
☏ 080 43712388
✉ *ipe@narsipurgroup.com*
✉ *sales.ipeblr@gmail.com*

INDIAN PRECISION ENGINEERS

Dimensions

Part Name	Electromagnetic Slip Ring Toothed Clutch	Type	24.503. __ __1- 24 VDC (size)

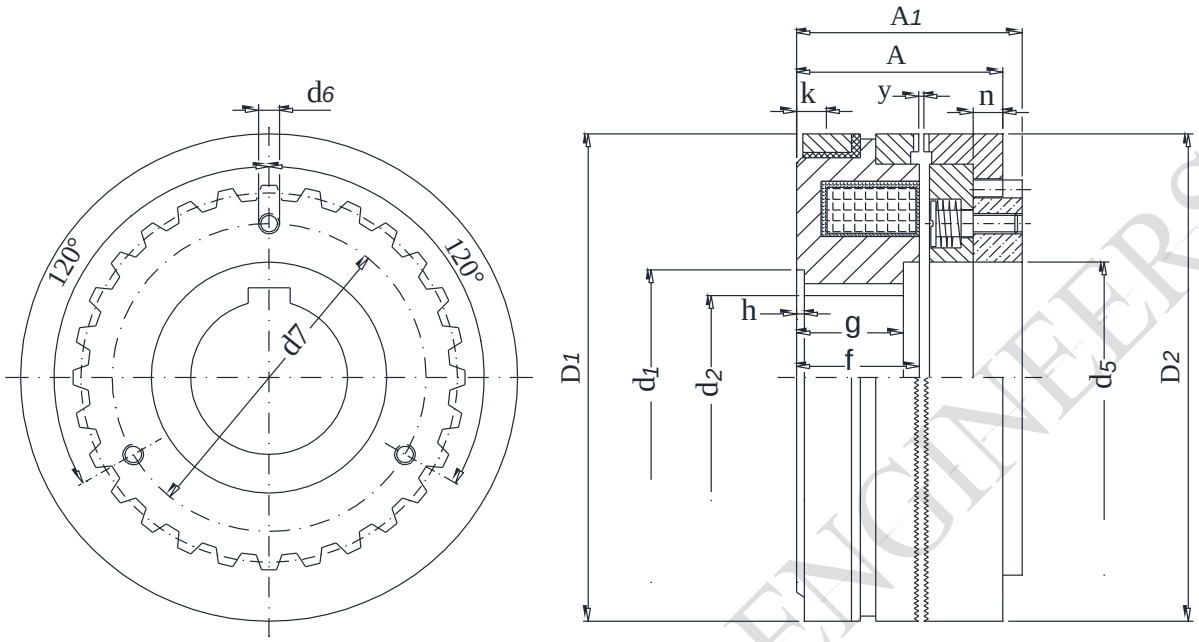

Size		11	12	15	21	22	24	26	28	120
Torque Mu	(Nm)	100	200	350	600	1200	2200	3000	4000	6000
DC Voltage	(V)	***24 V DC***								
Power Cons. Watt	(W)	17	24	42	51	69	74	87	100	140
Weight approx.	(kg)	0.93	1.2	2.1	3.4	6.6	10.3	12.5	18.7	21.5
Magnet Side		0.9	1.5	3.7	7.0	20	42	57	100	160
Moment of inertia (10^{-3}kgm^2) Armature Side		0.3	0.6	1.4	3.5	10	24	37	62	80
Ø D_1/D_2	(mm)	82	95	114	134	166	195	210	240	258
A	(mm)	37	38	43	50	60	68	73	81	84
A_1	(mm)	40	41	46	53	63.5	71	75	83.5	86.5
Bore Ød_2 H7	(Min)	12	25	25	25	30	45	50	60	75
	(mm)									
	(Max)	20	28	35	40	45	65	70	75	85
Multi Keyway Ød_2 H7	(mm)	**34H7 3(6x1.7)**	**A8x 36x40**	**A8x 46x50**	**A8x 52x58**	**A8x 72x78**	**A10x 82x88**	**A10x 92x98**	**A10x 102x108**	**A10x 112x120**
Ød_5 +0.2	(mm)	35	45	53	63	80	89	100	112	133
Ød_6	(mm)	M4	M4	M4	M5	M6	M6	M6	M6	M6
Ød_7 ±0.1	(mm)	55	65	80	100	120	150	150	150	170
Ød_1	(mm)	36	42	52	60	80	90	100	110.5	123
f	(mm)	23	23	26	29	35	38.5	38	42	46
g	(mm)	23	20	23	26	30	33.5	35	37	42
h +0.05	(mm)	1.5	1.5	2	2	2.5	3	3	3	3
k	(mm)	5.5	5.5	6	7	7	7	8.5	8.5	8.5
n	(mm)	6	6	7	8	9.5	12	14	14.5	16.5
y	(mm)	0.3	0.4	0.4	0.4	0.5	0.5	0.5	0.5	0.6

* The holes for attaching the adapter plate to the item of machinery must be made by the customers.

* Special Voltage Clutches available on request. * Keyways BS 4235, DIN 6885 * Technical Alteration reserved.

INDIAN PRECISION ENGINEERS

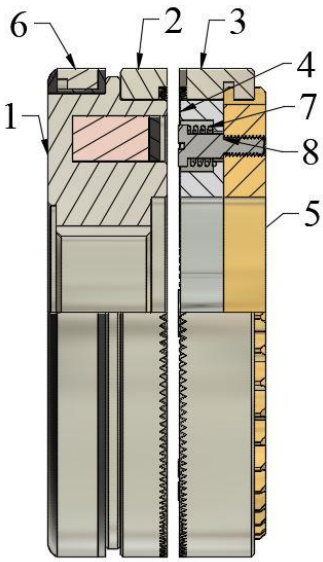

OPERATION

This Toothed clutch comprises a coil Housing (1) containing a potted coil, a face teeth drive ring (2) and slip ring (6) mounted on the coil housing outside. Coil Housing is bored has a keyway and is pressed directly on to the driving shaft. This part is to be preferred as the driving part of the clutch. Armature drive ring (3) is press fitted on armature plate (4) and these two slides on spur gear provided on adapter plate (5). Adapter plate is bolted to the item of machinery with which it must rotate. Adapter Plate is supplied without mounting holes. Required Mounting hole and finish bore can be made by the user. Spring (7) and screw (8) ensure that the two toothed rings are kept apart when the clutch is de energized. Face Teeth are machined on faces of the drive ring and armature drive ring. Energization of the coil through slip ring by telescopic brush (refer page 37 for brush details) generates a magnetic field which attracts the sliding armature plate and armature drive ring. The face teeth mesh, and this allows the driving torque to be transmitted. For disengagement all that is necessary is to switch off the power supply. Armature drive ring is retracted into rest position by means of the screw and springs.

APPLICATION

☞ Engagement at Rest or at a relative speed of +/-5r.p.m of the shafts but may be disengaged at any speed or under load. Nil residual torque. Operation is possible in both wet and dry conditions.

EXAMPLE OF INSTALLATION

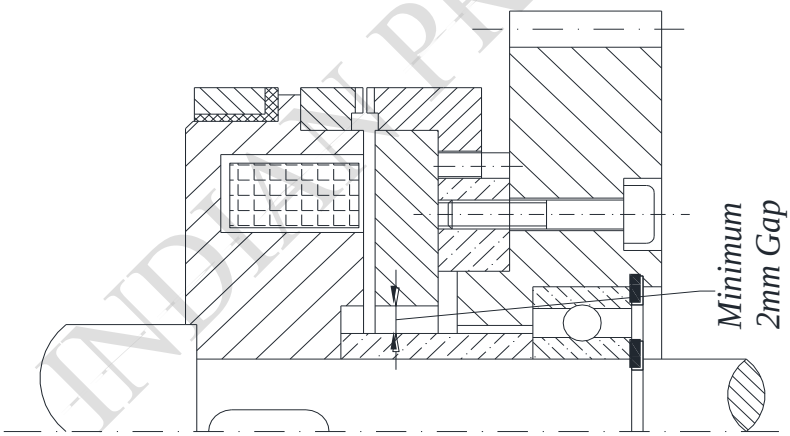

The Basic Version of Clutch for Torque transmission between shaft and gear wheel.

The Clutch should be fitted with the Coil Housing Body on the driving side.
An adapter plate is bolted and pinned to the gear wheel for transferring the torque from the clutch to the gear wheel.

ORDER EXAMPLE.

Electromagnetic Slip Ring Toothed Clutch
TYPE: 24.503.12.1 – 24 VDC
Bore d = 25mm / Keyway DIN 6885.

Contact Us:
☏ 080 43712388
✉ *ipe@narsipurgroup.com*
✉ *sales.ipeblr@gmail.com*

INDIAN PRECISION ENGINEERS

Part Name	Electromagnetic Slip Ring Toothed Clutch with Back Slot	Type	24.503. __ __2- 24 VDC (size)

Dimensions

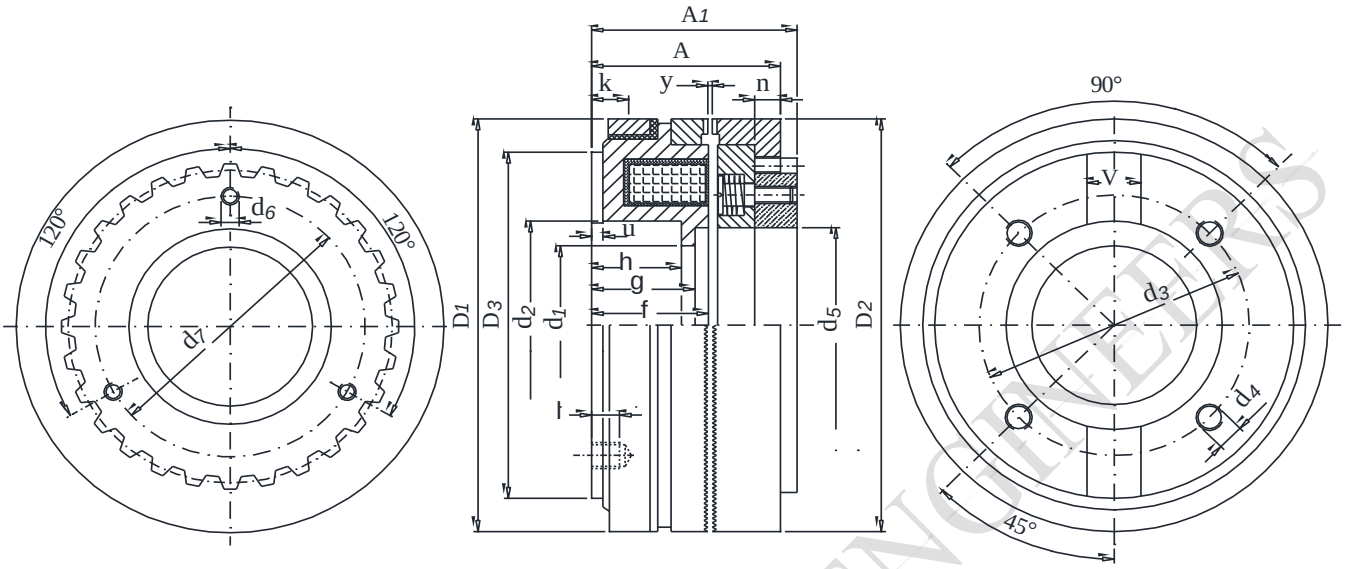

Size	11	12	15	21	22	24	26	28	120
Torque Mu (Nm)	100	200	350	600	1200	2200	3000	4000	6000
DC Voltage (V)	***24 V DC***								
Power Consumption (W)	17	24	42	49	69	77	87	100	140
Weight approx. (kg)	0.96	1.23	2	3.4	5.6	8.5	11.7	17.5	20
Moment of inertia (10^{-3}kgm^2) Magnet Side	0.9	1.5	3.8	9	18.5	38	60	108	105
Moment of inertia (10^{-3}kgm^2) Armature Side	0.3	0.6	1.5	4.2	10.0	20	36	63	79
Ø D_1/D_2 (mm)	82	95	114	140	166	195	210	240	258
A (mm)	39	40	47	54	60	67	77	84	90
A_1 (mm)	42	43	50	57	63.5	70	79	86.5	92.5
ØD_3 (mm)	67	78	95	120	142	170	184	216	234
Ød_1 (mm)	31	37	45	60	65	100	90	100	130
Ød_2 K6 (mm)	35	42	55	68	75	110	100	110	140
Ød_3 +0.1 (mm)	50	56	75	90	100	125	130	145	200
Ød_4 (mm)	M5	M6	M8	M8	M10	M10	M12	M12	M12
Ød_5+0.2 (mm)	35	45	53	70	80	110	100	112	133
Ød_6 (mm)	M4	M4	M4	M5	M6	M6	M6	M6	M6
Ød_7±0.1 (mm)	55	65	80	100	120	150	150	150	170
f (mm)	25	25	30	33	35	37.5	42	45	52
g (mm)	22.5	22	25	28	30	34	39	40	41
h +0.2 (mm)	20	20	22	22	25	28	31	32	33
k (mm)	7.5	7.5	11	11	13	13	14.5	14.5	14.5
l (mm)	5	5	6	8	9	14	16	18	13
u+0.1 (mm)	2.5	2.5	5	5	6	6	6	6	8
V ^{H7} (mm)	12	12	14	16	20	20	20	25	25
y (mm)	0.3	0.4	0.4	0.4	0.5	0.5	0.5	0.5	0.6
n (mm)	6	6	7	8	9.5	12	14	14.5	16.5

*** The holes for attaching the adapter plate to the item of machinery must be made by the customers**

*** Special Voltage Clutches available on request. * Keyways BS 4235, DIN 6885 * Technical Alteration reserved.**

INDIAN PRECISION ENGINEERS

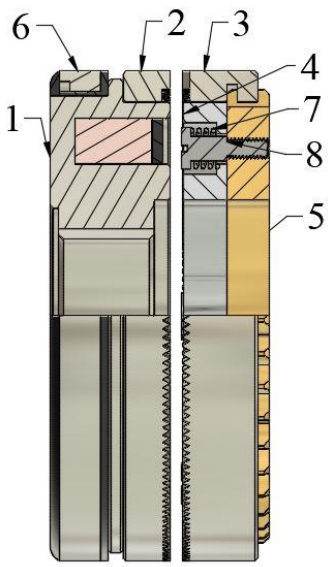

OPERATION:

This Toothed clutch comprises a coil Housing (1) containing a potted coil, a face teeth drive ring (2) and slip ring (6) mounted on the coil housing outside. Coil Housing is bolted to the machinery part with which it must rotate. Armature drive ring (3) is press fitted on armature plate (4) and these two slides on spur gear provided on adapter plate (5). Adapter plate is connected to the driving shaft by means of additional flange. Adapter Plate is supplied without mounting holes. Required Mounting hole and finish bore can be made by the user. Spring (7) and screw (8) ensure that the two toothed rings are kept apart when the clutch is de energized. Face Teeth are machined on faces of the drive ring and armature drive ring.

Energization of the coil through slip ring by telescopic brush (refer page 37 for brush details) generates a magnetic field which attracts the sliding armature plate and armature drive ring. The face teeth mesh, and this allows the driving torque to be transmitted. For disengagement all that is necessary is to switch off the power supply. Armature drive ring is retracted into rest position by means of the screw and springs.

APPLICATION:

- Engagement at Rest or at a relative speed of +/-5r.p.m of the shafts but may be disengaged at any speed or under load. Nil residual torque. Operation is possible in both wet and dry conditions.

EXAMPLE OF INSTALLATION

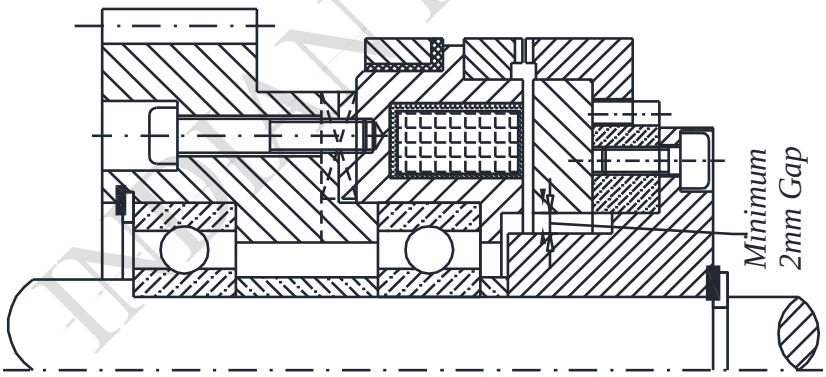

The Basic Version of Clutch for Torque transmission between shaft and gear wheel.

This version of the toothed clutch is designed so that the magnetic body also serves to accommodate the bearings.

ORDER EXAMPLE.

Electromagnetic Slip Ring Toothed Clutch with Back Slot
TYPE: 24.503.12.2 – 24 VDC

Contact Us:
☏ 080 43712388
✉ ipe@narsipurgroup.com
✉ sales.ipeblr@gmail.com

INDIAN PRECISION ENGIN

Part Name	Electromagnetic Toothed Brake	Type	24.503. __ __3- 24 VDC (size)

Dimensions:

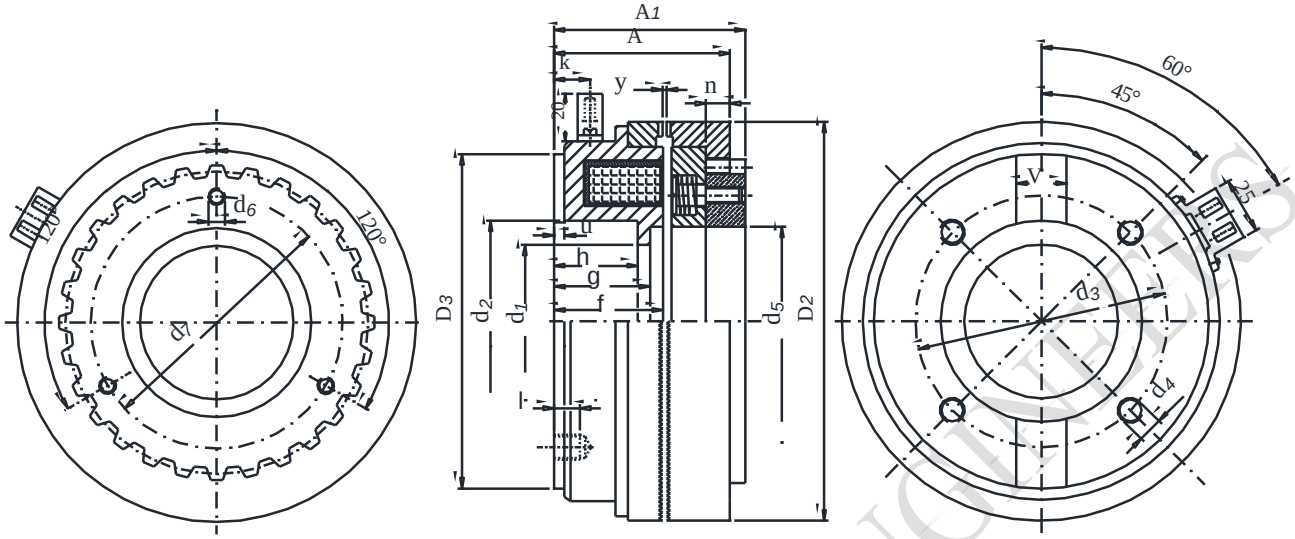

Size		11	12	15	21	22	24	26	28
Torque Mu	(Nm)	100	200	350	600	1200	2200	3000	4000
DC Voltage	(V)	24 V DC							
Power Consumption	(W)	17	24	42	49	69	77	87	100
Weight approx..	(kg)	0.9	1.2	1.9	3.2	5.4	8.2	11	17
Moment of inertia Armature Side	(10^{-3}kgm^2)	0.3	0.6	1.5	4.2	10.0	20	36	63
ØD_2	(mm)	82	95	114	140	166	195	210	240
A	(mm)	39	40	47	54	60	67	77	84
A_1	(mm)	42	43	50	57	63.5	70	79	86.5
ØD_3	(mm)	67	78	95	120	142	170	184	216
Ød_1	(mm)	31	37	45	60	65	100	90	100
Ød_2 K6	(mm)	35	42	55	68	75	110	100	110
Ød_3 +/-0.1	(mm)	50	56	75	90	100	125	130	145
Ød_4	(mm)	M5	M6	M8	M8	M10	M10	M12	M12
Ød_5+0.2	(mm)	35	45	53	70	80	110	100	112
Ød_6	(mm)	M4	M4	M4	M5	M6	M6	M6	M6
Ød_7±0.1	(mm)	55	65	80	100	120	150	150	150
f	(mm)	25	25	30	33	35	37.5	42	45
g	(mm)	22.5	22	25	28	30	34	39	40
h +0.2	(mm)	20	20	22	22	25	28	31	32
k	(mm)	7.5	7.5	11	11	13	13	14.5	14.5
l	(mm)	5	5	6	8	9	14	16	18
u+0.1	(mm)	2.5	2.5	5	5	6	6	6	6
V ^{H7}	(mm)	12	12	14	16	20	20	20	25
y	(mm)	0.3	0.4	0.4	0.4	0.5	0.5	0.5	0.5
n	(mm)	6	6	7	8	9.5	12	14	14.5

* The holes for attaching the adapter plate to the item of machinery must be made by the customers

* Special Voltage Brakes available on request. * Technical Alteration reserved.

INDIAN PRECISION ENGINEERS

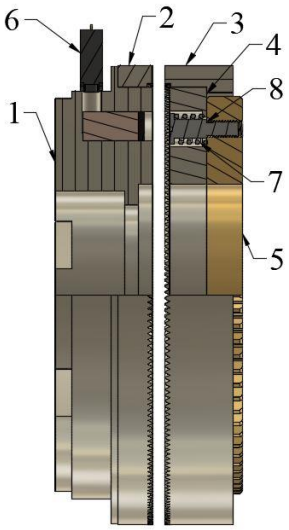

OPERATION:

This Tooth Holding Brake has a coil Housing (1) containing a potted coil, a face teeth drive ring (2) and Connector (6) mounted on the coil housing outside. Coil Housing is bolted to the stationary machinery body. Armature drive ring (3) is press fitted on armature plate (4) and these two slides on spur gear provided on adapter plate (5). Adapter plate is connected to the driving shaft by means of additional flange. Adapter Plate is supplied without mounting holes. Required Mounting hole and finish bore can be made by the user. Spring (7) and screw (8) ensure that the two toothed rings are kept apart when the clutch is de energized. Face Teeth are machined on faces of the drive ring and armature drive ring.

Energization of the coil through connector generates a magnetic field which attracts the sliding armature plate and armature drive ring. The face teeth mesh, and this allows the driving shaft to be held. For disengagement all that is necessary is to switch off the power supply. Armature drive ring is retracted into rest position by means of the screw and springs.

APPLICATION:

- Tooth Holding Brake with 2 poles plug and socket. For slip free holding in engaged position. Dynamic engagement is not possible. Operation is possible in both wet and dry conditions.

EXAMPLE OF INSTALLATION

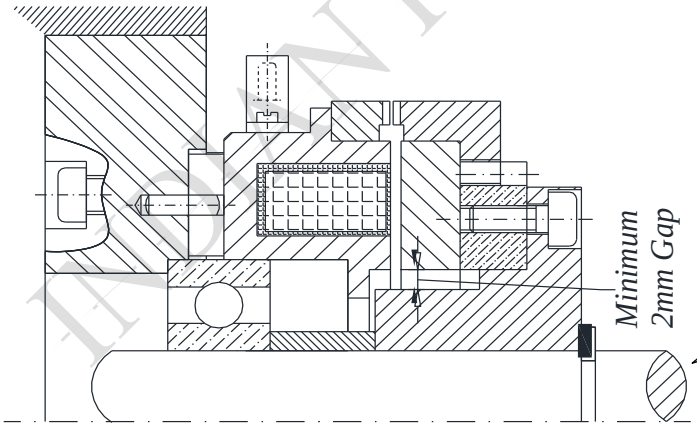

The Coil Housing of the brake is secured and located centrally to the end face of the housing. A slot is provided on coil housing back to help in locating the Coil Housing.
Secure Driven member axially.

ORDER EXAMPLE.

Electromagnetic Tooth Holding Brake
TYPE: 24.503.12.3 – 24 VDC

Contact Us:
☏ 080 43712388
✉ ipe@narsipurgroup.com
✉ sales.ipeblr@gmail.com

INDIAN PRECISION ENGINEERS

Part Name	Electromagnetic Stationery Toothed Clutch	Type	24.504. __ __- 24 VDC (size)

Dimensions:

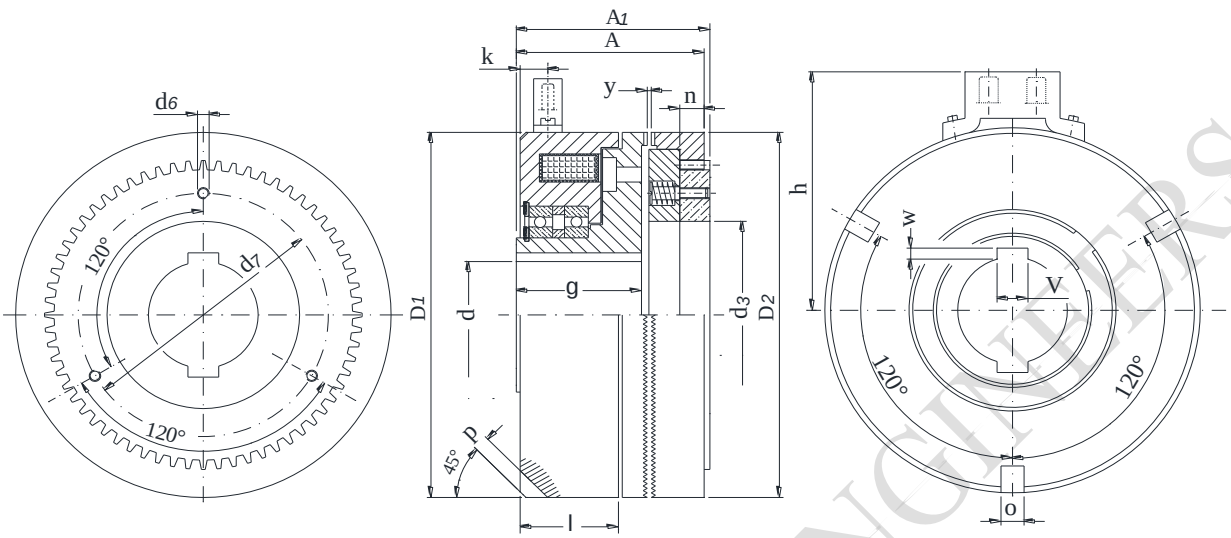

Size		11	12	15	21	22	24	26	28	120
Torque Mu	(Nm)	100	200	300	600	1400	2000	3000	4000	6000
Max. Speed Wet running	(min^{-1})	4500	4000	3500	3500	3000	3000	2500	2500	2500
Max. Speed Dry running	(min^{-1})	2000	2000	2000	2000	1750	1750	1500	1000	1000
DC Voltage	(V)	24 V DC								
Power Consumption	(W)	36	48	58	87	110	140	180	190	230
Weight *approx..*	(kg)	1.4	2	3.3	5.7	10	16	20.5	30	38
Moment of inertia Magnet Side	($10^{-3}kgm^2$)	0.33	0.75	1.6	4	9.5	20	32.5	65	77.5
Moment of inertia Armature Side	($10^{-3}kgm^2$)	0.18	0.43	1.1	2.5	6.6	19.2	26.0	50.0	80.0
Bores Ød^{H7}	min (mm)	12	20	25	30	35	40	45	50	60
Bores Ød^{H7}	Max (mm)	25	35	38	46	60	65	68	78	85
ØD$_1$	(mm)	82	95	114	134	166	195	210	240	258
ØD$_2$	(mm)	80	93	109	127	162	195	210	240	258
Ød$_3$	(mm)	38	46	56	62	79	100	105	115	130
Ød$_6$	(mm)	M4	M4	M4	M5	M6	M6	M6	M6	M6
Ød$_7$ +0.1	(mm)	52	62	70	85	108	150	150	150	170
A	(mm)	54	59	66	80	90	96	111	119	126
A$_1$	(mm)	57	62	69	83	93.5	99	113	121.5	128.5
g -0.2	(mm)	37	41	44	54	61	65	74	77	85
h	(mm)	57	63	73	83	99	114	121	136	145
k	(mm)	7	7	7	7	9	12	12	12	12
l	(mm)	36.5	40	43	53	60	51	59	61	68
n	(mm)	6	6	7	8	9.5	12	14	14.5	16.5
O +0.2	(mm)	6	6	8	8	8	12	12	12	12
p	(mm)	3	4	4	5	6	8	8	10	10
y	(mm)	0.3	0.4	0.5	0.5	0.5	0.5	0.5	0.5	0.5

*** The holes for attaching the adapter plate to the item of machinery must be made by the customers.**
*** Bore & Keyways as per customer requirement please Confirm: Ø d^{H7},V,W**
*** Special Voltage Clutches available on request. * Keyways BS 4235, DIN 6885 * Technical Alteration reserved.**

INDIAN PRECISION ENGINEERS

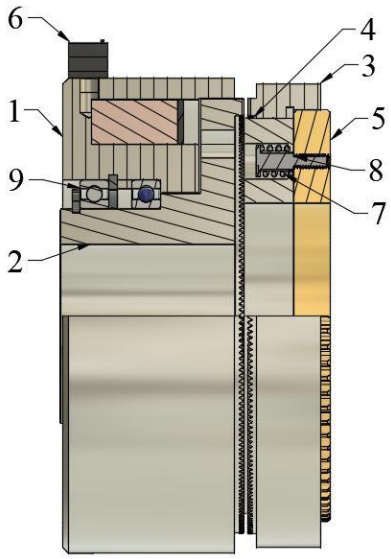

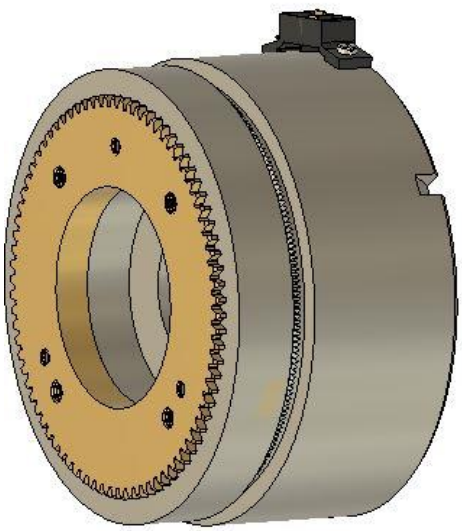

OPERATION

The Stationary Coil Housing (1) potted with the coil is centered over the rotor (2) by means of bearing (9). The Rotor is bored has a keyway and is pressed directly on to the driving shaft. Armature drive ring (3) is press fitted on armature plate (4) and these two slides on spur gear provided on adapter plate (5). Adapter plate is bolted to the item of machinery with which it must rotate. Adapter Plate is supplied without mounting holes. Required Mounting hole and finish bore can be made by the user. Spring (7) and screw (8) ensure that the two toothed rings are kept apart when the clutch is de energized. Face Teeth are machined on faces of the rotor and armature drive ring.

Energization of the stationary coil by the terminals generates a magnetic field which attracts the sliding armature plate and armature drive ring. The face teeth mesh, and this allows the driving torque to be transmitted. For disengagement all that is necessary is to switch off the power supply. Armature drive ring is retracted into rest position by means of the screw and springs.

APPLICATION

- Engagement at Rest or at a relative speed of +/-5r.p.m of the shafts but may be disengaged at any speed or under load. Nil residual torque. Operation is possible in both wet and dry conditions.

EXAMPLE OF INSTALLATION

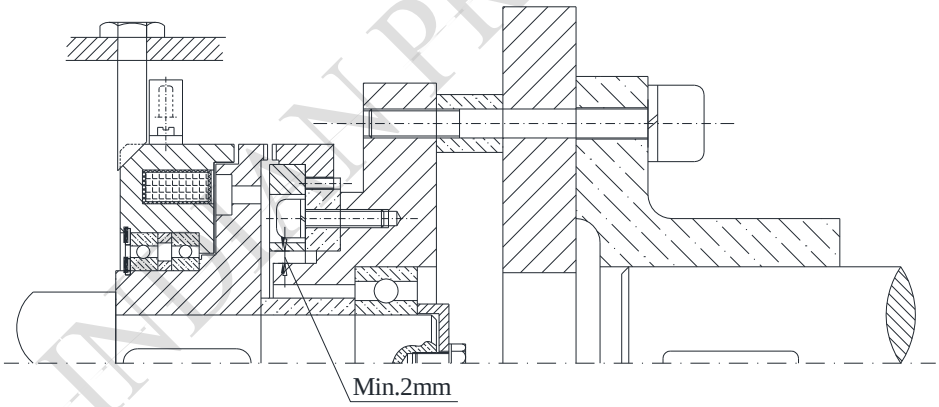

The Basic Version of Clutch for Torque transmission between two shaft ends.

The stationary body is located using a lug.

Rotor is inserted into the driving shaft.

An adapter plate is bolted into the flexible coupling to transfer torque to the driven shaft.

ORDER EXAMPLE.

Electromagnetic Stationary Toothed Clutch
TYPE: 24.504.15 – 24 VDC
Bore d = 22mm / Keyway to DIN 6885

Contact Us:
☏ 080 43712388
✉ ipe@narsipurgroup.com
✉ sales.ipeblr@gmail.com

INDIAN PRECISION ENGINEERS

Part Name	Electromagnetic Stationary Toothed Clutch without Bearing	Type	24.514. __ __- 24 VDC (size)

Dimensions

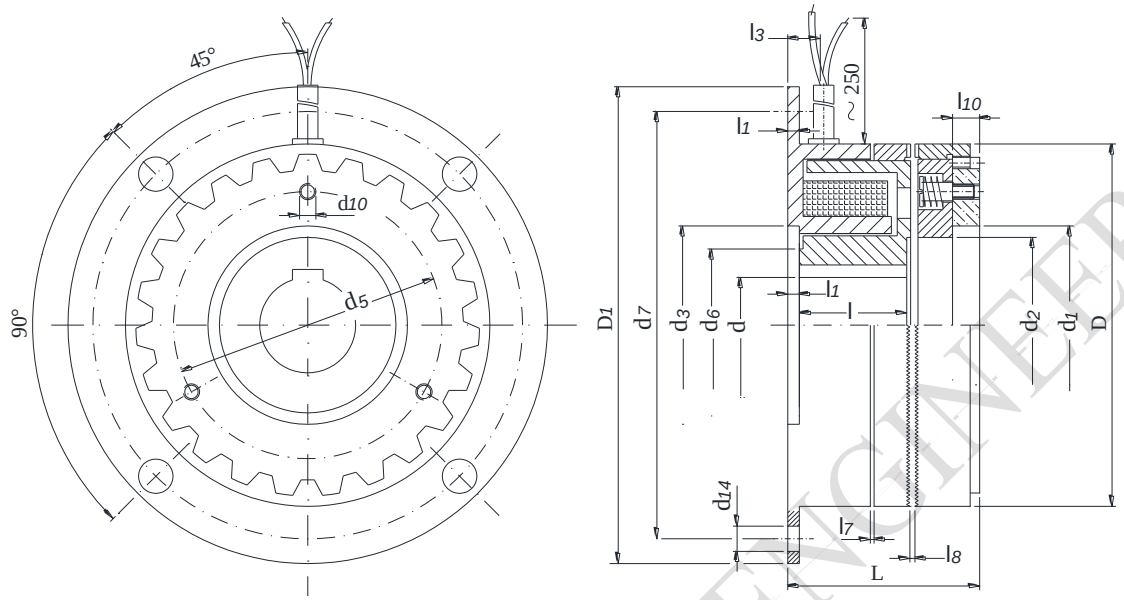

Size			11	12	15	21	22	24
Torque	Mu	(Nm)	50	100	250	500	1000	2200
Max Speed	(min^{-1})		4000	3500	3500	3000	3000	2500
DC Voltage		(V)	24 V DC					
Power Consumption		(W)	23.8	27	37	53.8	79.6	114
Moment of inertia	Magnet Side (10^{-3}kg m^2)		0.35	0.81	1.92	4.46	10.3	25.7
	Armature Side		0.37	0.52	1.85	4.51	12.8	29.2
Weights		(Kg)	1.4	2.3	3.4	5.8	10	13.5
Bores	min Ød^{H7}	(mm)	20	20	25	30	50	50
	max		25	35	42	50	70	80
Dimensions (mm)	ØD	(mm)	82	95	114	134	166	195
	ØD_1	(mm)	100	125	140	165	195	230
	Ød_1^{H7}	(mm)	42	52	62	72	90	100
	Ød_2	(mm)	36.5	46	55	68	80	95
	Ød_3^{H8}	(mm)	42	52	62	80	100	125
	Ød_5	(mm)	60	70	80	95	120	150
	Ød_6	(mm)	30	40	45	62	77	100
	Ød_7	(mm)	92	112	125	150	180	215
	Ød_{14}	(mm)	4x5.5	4x6.6	4x6.6	4x9	4x9	4x9
	Ød_{10}	(mm)	3xM4	3xM4	3xM4	3xM5	3xM6	3xM6
	L	(mm)	41.5	48.5	53	63.5	72	86
	$l_{-0.1}$	(mm)	26	27.5	30.5	38	40.5	52
	l_1	(mm)	2.5	3	3.5	3.5	4	4
	l_3	(mm)	8	8.5	11	10.5	13	18.5
	l_{10}	(mm)	4	6	6.5	8.5	11.5	12
	$l_{7\pm0.1}$	(mm)	0.5	0.8	0.8	0.8	0.8	1.0
	$l_{8\pm0.1}$	(mm)	0.3	0.4	0.4	0.4	0.5	0.5

***The holes for attaching the adapter plate to the item of machinery must be made by the customers.**

*** Special Voltage clutches available on request. * Keyways BS 4235, DIN 6885 * Technical Alteration**

INDIAN PRECISION ENGINEERS

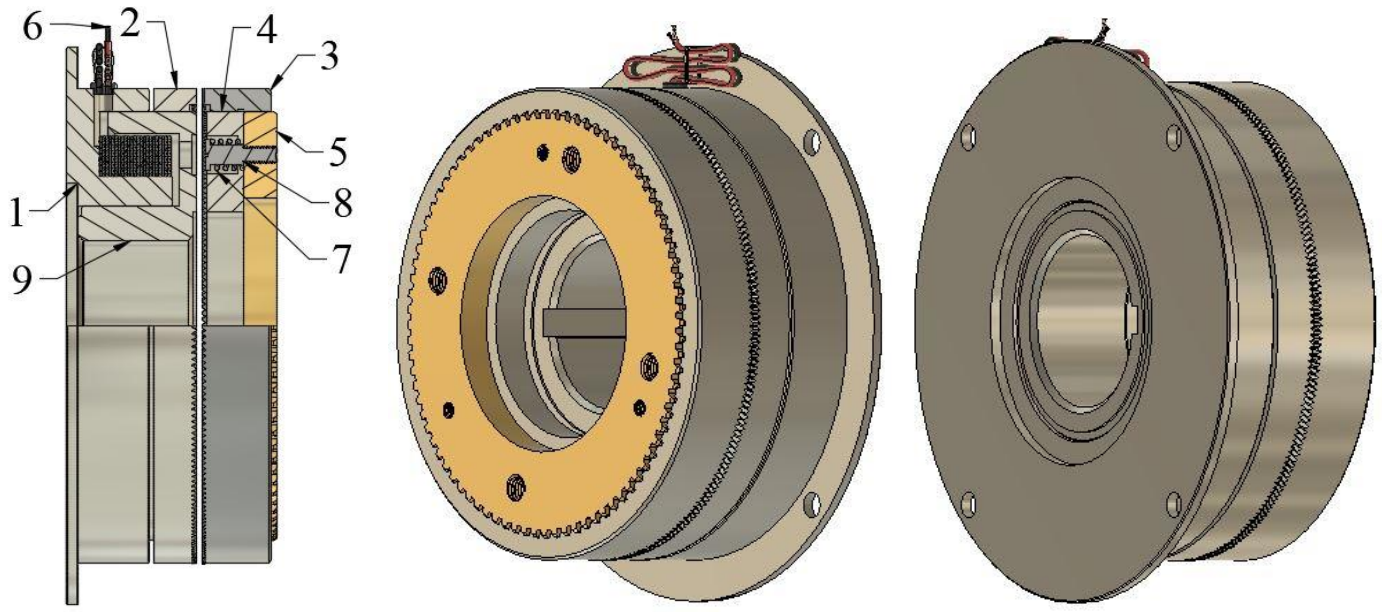

OPERATION

The Stationary Coil Housing (1) potted with the coil is centered over the rotor (2) by means of mounting flange. The Rotor is bored has a keyway and is pressed directly on to the driving shaft. Drive Ring (2) is press fitted on rotor. Armature drive ring (3) is press fitted on armature plate (4) and these two slides on spur gear provided on adapter plate (5). Adapter plate is bolted to the item of machinery with which it must rotate. Adapter Plate is supplied without mounting holes. Required Mounting hole and finish bore can be made by the user.
Spring (7) and screw (8) ensure that the two toothed rings are kept apart when the clutch is de energized. Face Teeth are machined on faces of Drive Ring and armature drive ring.

APPLICATION

- Engagement at Rest or at a relative speed of +/-5r.p.m of the shafts but may be disengaged at any speed or under load.
  Nil residual torque. Operation is possible in both wet and dry conditions.

INDIAN PRECISION ENGINEERS

EXAMPLE OF INSTALLATION

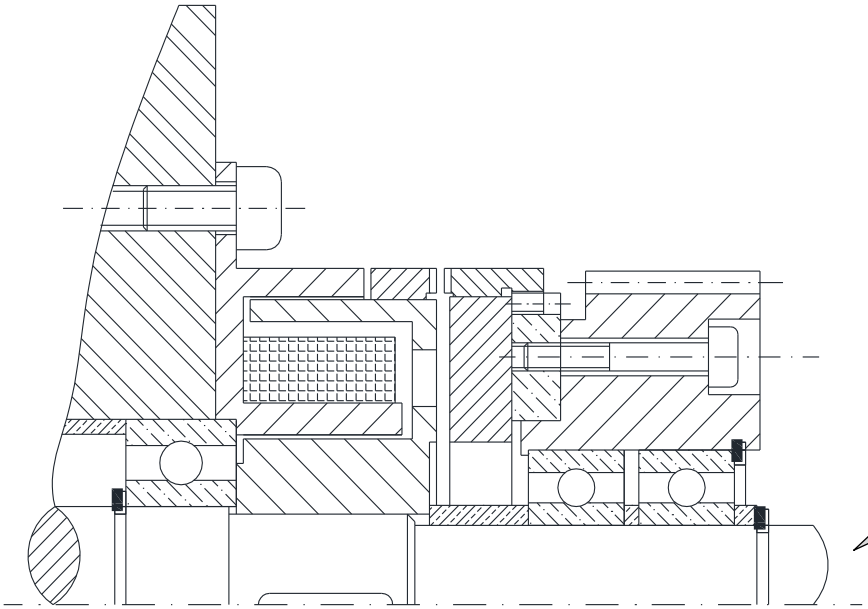

Centering of Clutch Housing must be done with care so that the housing does not touch the rotating rotor.

MOUNTING TOLERANCES AND ALIGNMENT FOR CONNECTING PARTS.

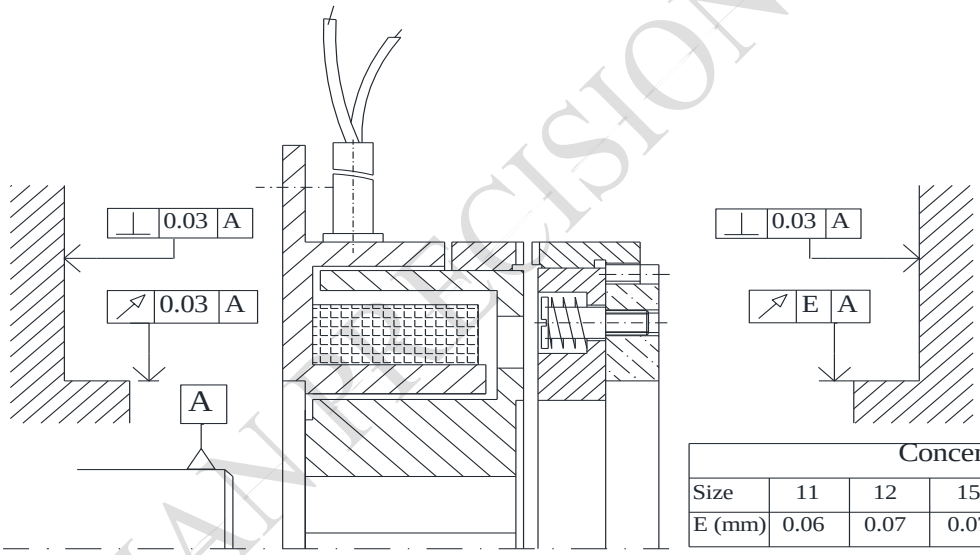

Concentricity						
Size	11	12	15	21	22	24
E (mm)	0.06	0.07	0.07	0.07	0.08	0.08

ORDER EXAMPLE.

Electromagnetic Stationary Toothed Clutch Without Bearing
TYPE: 24.514.22– 24 VDC
Bore d = 50mm / Keyway to DIN 6885

Contact Us:
☏ 080 43712388
✉ *ipe@narsipurgroup.com*
✉ *sales.ipeblr@gmail.com*

INDIAN PRECISION ENGINEERS

INSTALLATION OF MULTIDISC CLUTCHES AND BRAKES

1. The Clutches should be thoroughly cleaned before fitting.
2.
    a. It is very much essential that the clutch is installed using pressure only and not by hammering it into position. Apply pressure at C or D and never at A or B.
    b. The class fitting for the shaft should always be between h7 and j6.
    c. When fitted, the clutch body must run true both axially and radially.
3.
    a. The discs must be assembled in such a manner that the clutch body and the armature plate are in contact with a disk which revolves with these components.
    b. The expander springs of the outer disc must bear against the surface of the adjacent outer disc.
    c. The outer plates are arranged in such a way that the expander springs are facing the armature plate and are out of phase with one another by 30º.
    d. The last outer plate is assembled in such a way that the expander springs are facing the coil housing and are out of phase with the previous plate by 30º.
4. When the magnet body is pressed on to the shaft, care must be taken to avoid burring. All sharp edges must be rounded off.
5. The gap between the two halves of the clutch should be maintained as per catalogue very strictly.
6. A multiple disc slipring clutch (type with drive transmitted from inner to outer plate) must not be used as a brake with the magnet body stationery since the dirt build up on the slip Ring will cause short circuit.
   In this type of clutch the outer carrier is supplied with a pilot bore and arrangements for centering and attachment should be made by the customer. If necessary, the carrier must be bolted and pinned to its mating part.
   The pilot provided on the carrier can be turned to any diameter required. The bore is ground to facilitate easy mounting of a bearing. While turning care should be taken to fix the carrier true with respect to the bore.
7. In a stationary field type of clutch the maximum speed permitted is determined by the maximum speed permitted for the bearings.
8. The restraining device (holding the coil housing) which prevents the magnet body from rotating must not cause any axial or radial distortion to load the bearings in a stationery type of clutch.
9. While mounting two stationery field clutches back-to-back a small space should be left between the units for the oil to reach the bearings.
10. In a stationery field clutch the air gap between stator and rotor is very critical. Hence, it should never be dissembled.

Vertical Installation:

If the clutch or the brake is to be installed vertically, then the armature disc should be at the bottom. The disc clearance should be reduced to 0.2mm to reduce the engagement time.

INDIAN PRECISION ENGINEERS

INSTALLATION OF TOOTHED CLUTHCES & BRAKES

1. The Positive type of Toothed Clutches can transmit a higher torque (torque through profiled teeth) than a multi-disc clutch of the same size. High speeds are possible and are maintenance free.
2. The clutches should be thoroughly cleaned before assembly.
3. They should be engaged only while at rest or at a relative speed of ± 5 r.p.m. of the shafts but may be disengaged at any speed or under load.
4. It is very much essential that the clutch is installed using pressure only and not hampering it into position. Apply pressure at C or D and never at A or B.
5. The class fitting for the shaft should always be h7 to j6.
6. It is very important that the clutch coil housing and Armature disc is properly centered and located axially. The maximum radial and axial run-out permitted is 0.02mm.
7. When the clutch body is pressed onto the shaft, care must be taken to avoid burring. All sharp edges must be rounded off.
8. The Armature Plate must move very freely in the axial direction.
9. Ensure that the screws on the armature plate are fully tightened in position.
10. The gap between the two halves of the clutch should be maintained as per catalogue very strictly.
11. In a stationery field type of clutch the maximum speed permitted is determined by the maximum speed permitted for the bearings.
12. The restraining device (holding the coil housing) which prevents the magnet body from rotating must not cause any axial or radial distortion to load the bearings in a stationery type of clutch.
13. While mounting two stationery clutches back-to-back, a small gap should be left between the units for the oil to reach the bearings.
14. A radial gap of 2mm is maintained between the shaft and the armature plate to prevent magnetic flux leakage into the shaft.
15. The drive motor and the clutch should never be energized at the same instant.
16. Both Wet and Dry operation is possible.
17. In case the clutch is installed vertically then the armature disc clearance should reduce to 0.2mm to reduce the engagement time. Ensure armature plate is at the bottom.
18. The toothed Clutches can be supplied with different tooth forms continuous engagement (Fig A & B) Fixed point engagement (Fig D). Unidirectional engagement (Fig.C).

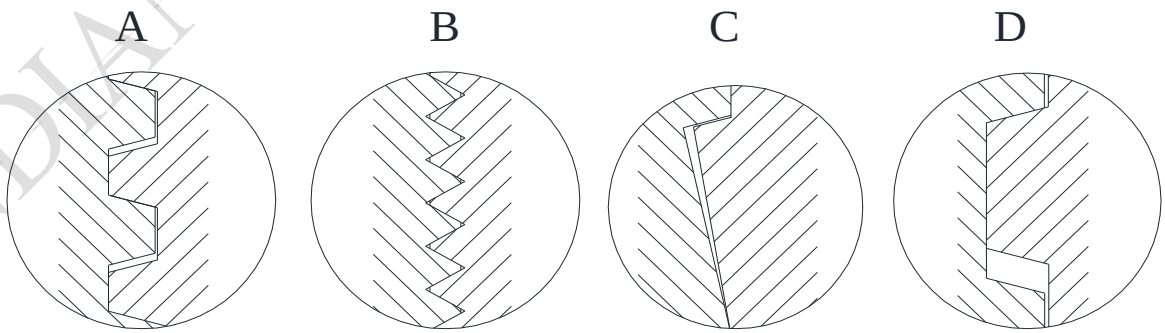

19. The tooth clutches are provided with brass drive rings to facilitate easy replacement of the drive rings and for their non-magnetic property.

20. The stationery field type of clutches should never be disassembled since the air gap between the stator and rotor is very critical.

INDIAN PRECISION ENGINEERS

OPERATING INSTRUCTIONS

LUBRICATION:

1. Clutches with discs in the Magnetic circuit can only be operated wet.

2. Splash or internal lubrication is recommended for the clutches and Brakes. For splash lubrication it is advisable to immerse 1/10th of the clutch in oil.

3. The dark color of the oil due to the high loading of the clutch is Quite harmless.

4. The intervals between oil changes depend on the operating condition of the clutch, the oil quantity, oil temperature etc.

5. The oil used should have the following properties:
   a) High heat and aging resistance.
   b) Negative electrolytic properties.
   c) Low content of solids.
   d) Good conductivity and cooling.
   e) Viscosity of 21 mm^2/s (21cSt)

6. The oil flow rate should be approximately 0.1 to 0.2 it/min/clutch.

   The following oils are recommended:

Supplier	Type
B.P.	Cabol 32 Cabol 46
Castrol	Perfecto T 32 Hypsin AWS 4 G
ESSO	Esstic 32 Teresso EP 47 NUTO H 44
MOBIL	VAC HLP 25 D-T-E Oil Light
SHELL INDIAN OIL	Hydrol 32 Servosystem HLP (N)22

DRY OPERATION

1. Adequate ventilation should be provided.

2. Corrosive environment should be avoided.

3. Moist environment should be totally avoided.

INDIAN PRECISION ENGINEERS

TELESCOPIC BRUSHES

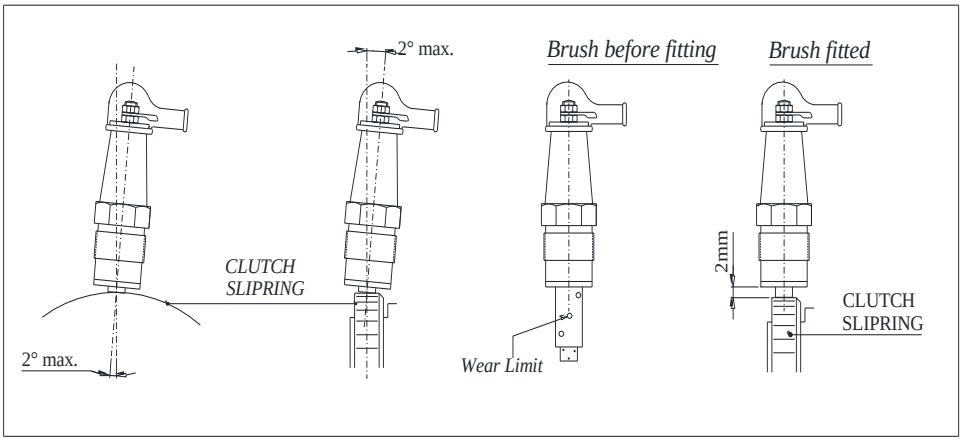

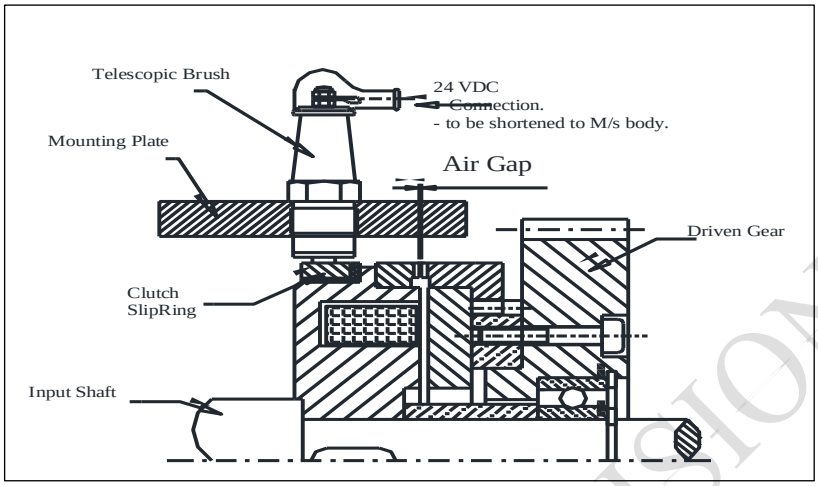

1. Brushes must be connected to the positive pole of supply.

2. For dry running, carbon brushes are adequate.

3. For wet running, bronze gauze wire brush should be used.

4. Color code is used for matching before replacement of brushes.

5. The maximum permitted operating speeds of slipring type of clutches depend on the rubbing velocity permitted. For the slipring type operating wet, velocities above 20m/s requires an additional dummy brush. A dummy brush is also required at lower rubbing velocities for constantly varying current. Higher slipring velocities are permitted with dry operation.

6. Proper installation with minimum vibration is required for long life. In case the brushes are not screwed directly into the machine housing; They must be supported by strong bolted brackets on each side.

7. Brushes should never be fitted into the oil sump since the danger of short circuits exists through the bridging by metal particles.

8. The brushes should be checked for undue wear once every three Months.

9. Brushes of standard installation lengths can be expected to have a longer service life than the long type owing to their least tendency to oscillate.

10. Sparks between the brush and the slipring should be avoided at all Cost since it will produce a pitted surface.

11. In case the slipring becomes pitted or grooved they can be reground to a depth of 0.5mm (diameter).

12. It is essential to ensure that good contact between the clutch body and the machine housing or the negative pole is maintained.

INDIAN PRECISION ENGINEERS

POWER SUPPLY

1. The nominal voltage for clutches should be 24 VDC (± 10%).

2. To minimize the line losses in voltage the power pack must be operated with maximum load possible in service.

3. The sparks which tend to occur between the relay contacts, due to the inductive load when the coil is de-energized, should be prevented by using a spark quenching capacitor as in fig.a

4. A high self-induced voltage is produced at the time of disengagement of Clutch or brake. This can damage the isolators or relays. Suitable surge-protection devices (varistores) should be used as shown in fig.b.

5. Rapid engagement of the clutch or brake is possible by connecting a resister in series as shown in fig..c.

6. Rapid disengagement of clutch of brake is possible by connecting a Capacitor in parallel as shown in fig.d.

7. Faster engagement of the clutch or brake can be achieved by applying a pulsed voltage up to three times the rated voltage.

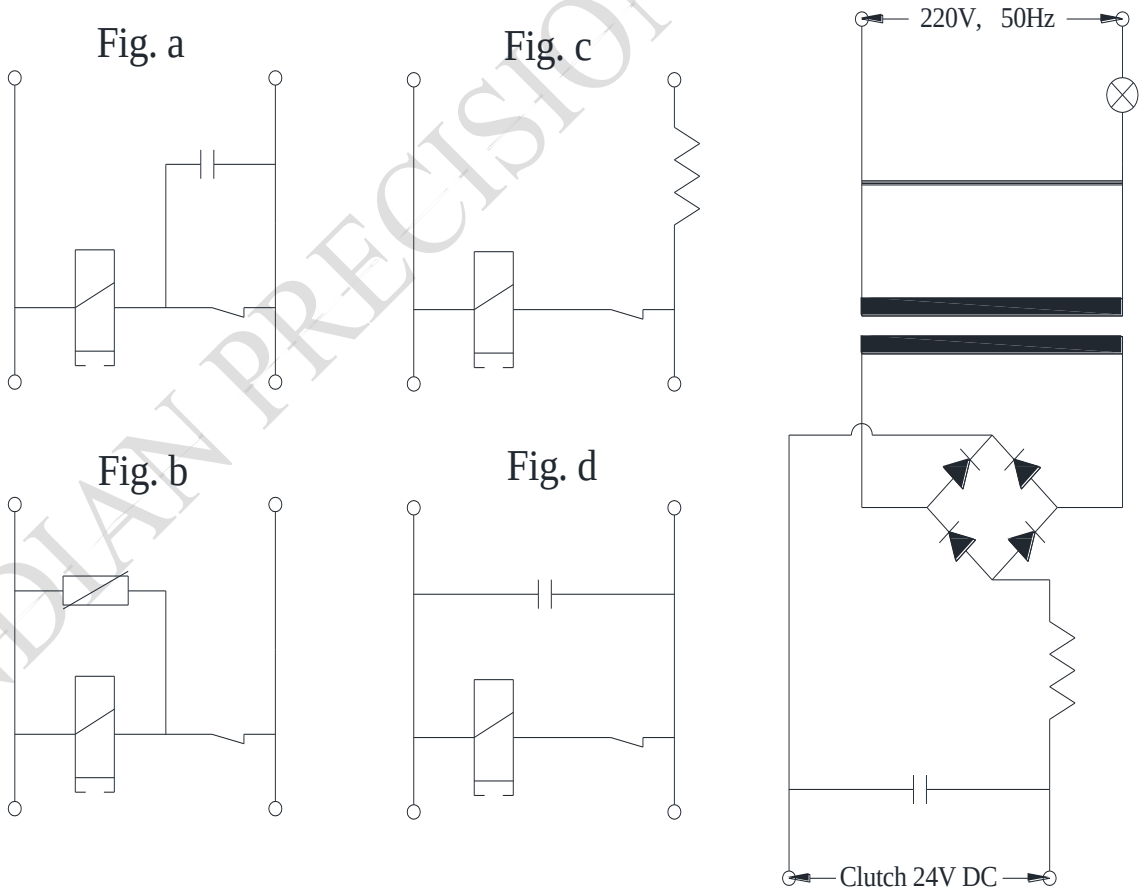

INDIAN PRECISION ENGINEERS

QUESTIONNAIRE FOR THE APPLICATION OF CLUTCHES AND BRAKES

Send Enquiry

1	Type of drive unit: a. Electric Motor ( ) b. I.C.Engine ( ) c. Others *(Please specify)*_____
2	Capacity and speed of prime mover: Type _____ _____ KW _____ min^{-1}
3	Type of drive machine: a. Lathe ( ) b. Milling Machine ( ) c. Others *(Please specify)*_____
4	Type of drive required: a. Feed Gear ( ) b. Main drive ( ) c. Transverse Gear ( ) d. Others *(Please Specify)* _____
5	Maximum torque to be transmitted by the clutch: P (KW) T= 9550 P/n n (min^{-1}) _____ *Nm*
6	Speed of the clutch before engagement: n1 = speed of input shaft _____ min^{-1} n2 = speed of output shaft _____ min^{-1}
7	Speed of the clutch after engagement: _____ min^{-1}
8	Clutch engaged at Zero rpm: Yes ( ) No ( )
9	Clutch engaged: Under load ( ) Without Load ( )
10	Acceleration time required: _____Sec
11	Number of engagements per hour / day: _____
12	Moment of inertia (j) of all masses to be accelerated - - or decelerated referred to Clutch shaft _____ Kgm^2

13	Operating Conditions: a. Dry ( ) c. Wet ( ) b. Horizontal ( ) d. Vertical ( )
15	Shaft diameters: Input _____ mm. Output _____ mm.
16	Spline/Keyway Details:
17	Ambient Temperature: °C
18	Maximum Outer diameter of the Clutch /Brake: _____ mm.
19	Maximum Width of the Clutch/Brake: _____

Briefly explain your application / purpose of using clutch or Brake,

CUSTOMER DETAILS:

Company Name: _____

Address: _____

_____

_____***Pin***_____

Contact Person Name: _____

Designation: _____

Contact Number: _____-_____

Email: _____

Contact Us:
☏ 080 43712388
✉ ipe@narsipurgroup.com
✉ sales.ipeblr@gmail.com

INDIAN PRECISION ENGINEERS

ಇಂಡಿಯನ್ ಪ್ರಿಸಿಷನ್ ಇಂಜಿನಿಯರ್ಸ್

No. 15/16, Survey No. 29 /1 & 2,
Chunchaghatta Road, Kanakapura Main Road,
Konanakunte Post, Bengaluru,
Karnataka – 560062 – INDIA.

Contact Us: ☏ 080 43712388, ✉ ipe@narsipurgroup.com, sales.ipeblr@gmail.com

https://goo.gl/maps/jYhPn6BwG9CJdyer6

www.narsipurgroup.com